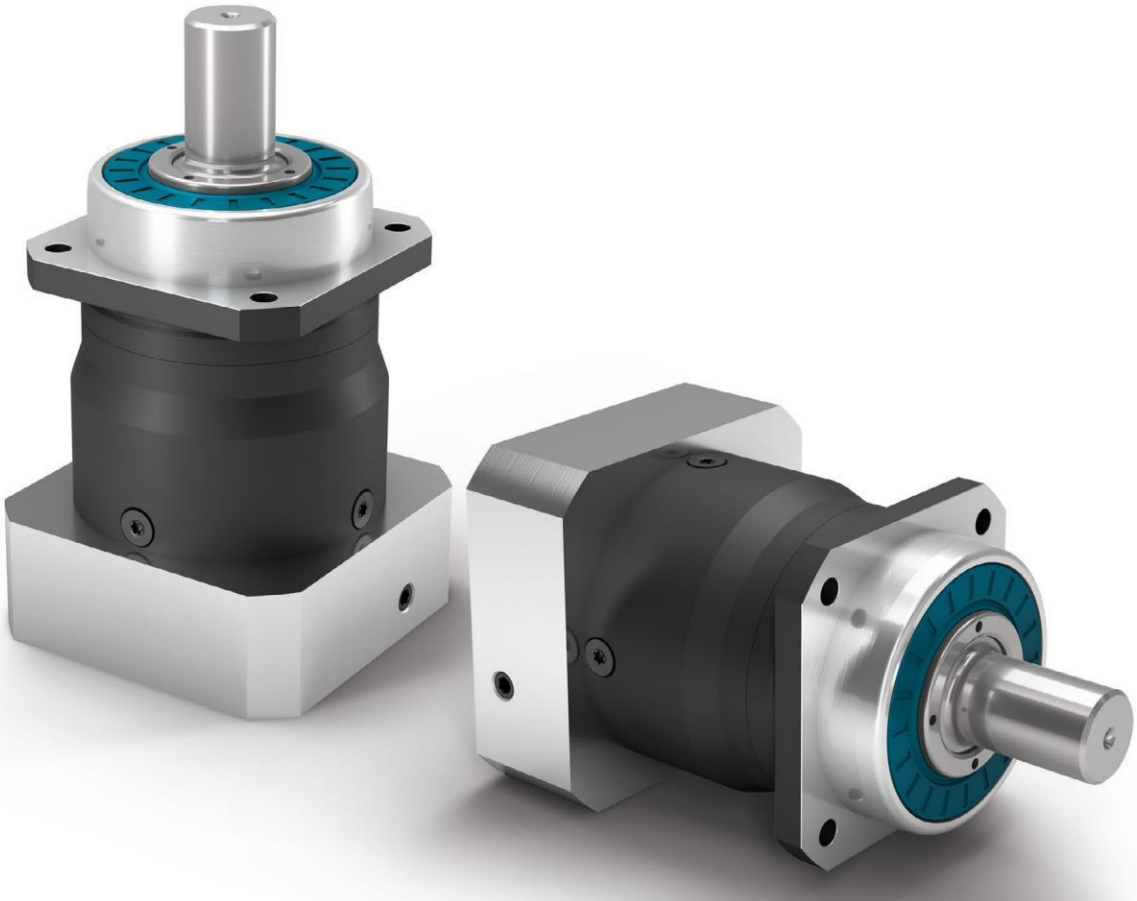

PLHE

这款行星减速机的进步之处在于：集高精度和经济性于一身

PLHE 是世界首款经济性与高精度完美结合的减速机。此款减速机配有预紧的圆锥滚子轴承，确保了很高的刚性和极佳的负载能力。我们研发的密封件能够完全防止灰尘和喷溅水进入机器内。

This is progress: In this planetary gearbox, precision and cost effectiveness meet

The **PLHE** is the world's first combination of economy and precision planetary gearboxes. The prestressed tapered roller bearings of our planetary gearboxes safeguard great stiffness even under the highest loads. The seal we have developed provides the perfect protection against dust and water jets.

额定扭矩 Nominal output torque	**15 - 260 Nm**
径向力 Radial force	**3200 - 6000 N**
轴向力 Axial force	**4400 - 8000 N**
回程间隙 Torsional backlash	**7 - 12 arcmin**
防护等级 Protection class	**IP65**

结构尺寸
Frame sizes

60 **80** **120**

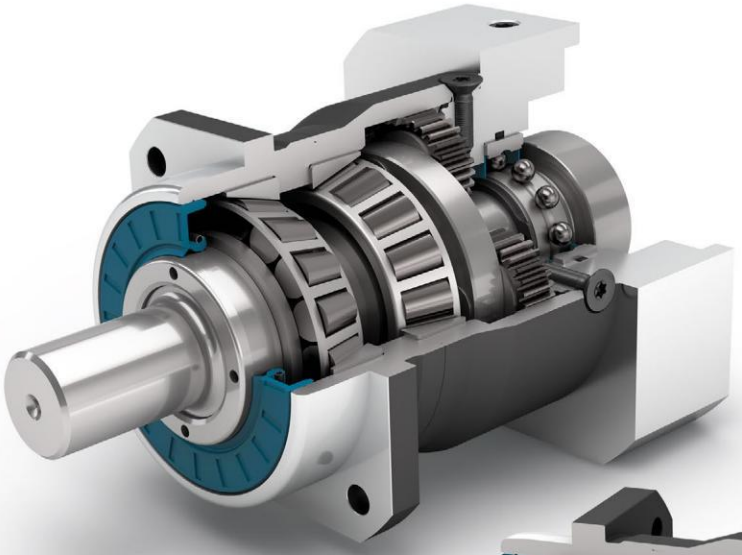

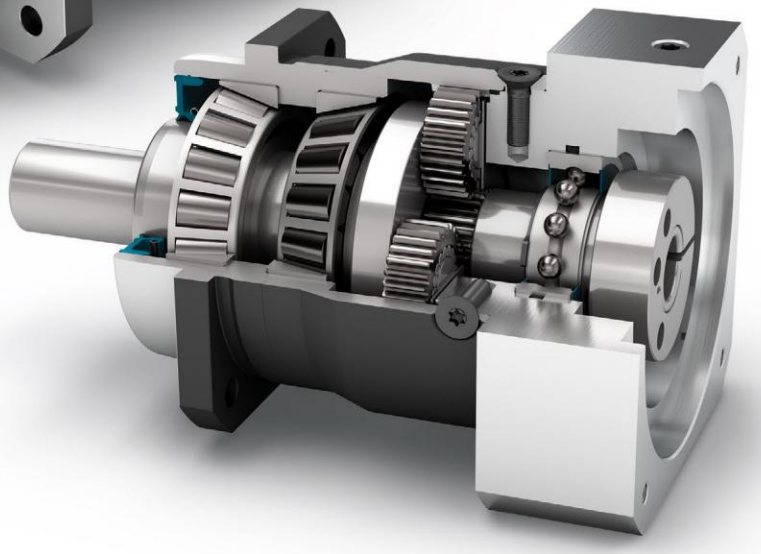

经济型
Economy Line

同轴减速机
Coaxial gearbox

旋转方向 同方向
Equidirectional rotation

直齿
Spur gear

正方形输出法兰
Square type output flange

配有预紧的圆锥滚子轴承
Preloaded tapered roller bearings

径向轴密封
Rotary shaft seal

输出端带有超长定心环
Extra long centering collar

行星齿轮架
Planet carrier in disc design

可选：花键输出轴（DIN 5480）
Option: Splined output shaft (DIN 5480)

可选：装有小齿轮的高精度减速机 140页
Option: Planetary gearbox with mounted pinion on page 140

技术特点的详细解释，请从第169页读起。
Detailed explanations of the technical features starting on page 169.

Code	减速机参数	Gearbox characteristics			PLHE060	PLHE080	PLHE120	p[1]
	使用寿命 (L_{10h})	Service life (L_{10h})	t_L	h	30.000			
	满载时效率[2]	Efficiency at full load[2]	η	%	97			1
					96			2
	最低工作温度	Min. operating temperature	T_{min}	°C	-25			
	最高工作温度	Max. operating temperature	T_{max}		90			
	防护等级	Protection class			IP65			
S	标准润滑	Standard lubrication			润滑脂（终生润滑）/ Grease (lifetime lubrication)			
F	食品级润滑	Food grade lubrication			润滑脂（终生润滑）/ Grease (lifetime lubrication)			
L	低温润滑[3]	Low temperature lubrication[3]			润滑脂（终生润滑）/ Grease (lifetime lubrication)			
	安装位置	Installation position			任意 / Any			
S	标准回程间隙	Standard backlash	j_t	arcmin	< 10	< 7	< 7	1
					< 12	< 9	< 9	2
	抗扭刚度[2]	Torsional stiffness[2]	c_g	Nm / arcmin	2,6 - 4,4	7,3 - 11,6	18,5 - 26,0	1
					2,5 - 4,6	7,3 - 12,3	16,7 - 27,5	2
	减速机重量[2]	Gearbox weight[2]	m_G	kg	1,5 - 1,6	3,0	6,8 - 7,0	1
					1,7 - 1,8	3,5 - 4,0	8,5 - 8,8	2
S	标准的箱体表面	Standard surface			箱体：钢 – 热处理后氧化（黑色） Housing: Steel – heat-treated and post-oxidized (black)			
	运行噪音[4]	Running noise[4]	Q_g	dB(A)	58	60	65	
	基于减速机输入法兰的最大弯矩[5]	Max. bending moment based on the gearbox input flange[5]	M_b	Nm	8	16	40	

输出轴载荷	Output shaft loads			PLHE060	PLHE080	PLHE120	p[1]
20,000 h 的径向力[6][7]	Radial force for 20,000 h[6][7]	$F_{r\,20.000\,h}$	N	3200	5500	6000	
20,000 h 的轴向力[6][7]	Axial force for 20,000 h[6][7]	$F_{a\,20.000\,h}$		4400	6400	8000	
30,000 h 的径向力[6][7]	Radial force for 30,000 h[6][7]	$F_{r\,30.000\,h}$		3200	4800	5400	
30,000 h 的轴向力[6][7]	Axial force for 30,000 h[6][7]	$F_{a\,30.000\,h}$		3900	5700	7000	
最大径向力[7][8]	Maximum radial force[7][8]	$F_{r\,Stat}$		3200	5500	6000	
最大轴向力[7][8]	Maximum axial force[7][8]	$F_{a\,Stat}$		4400	6400	8000	
20,000 h 倾斜力矩[6][8]	Tilting moment for 20,000 h[6][8]	$M_{K\,20.000\,h}$	Nm	191	383	488	
30,000 h 倾斜力矩[6][8]	Tilting moment for 30,000 h[6][8]	$M_{K\,30.000\,h}$		191	335	439	

转动惯量	Moment of inertia			PLHE060	PLHE080	PLHE120	p[1]
转动惯量[2]	Mass moment of inertia[2]	J	$kgcm^2$	0,069 - 0,178	0,370 - 0,775	1,390 - 2,486	1
				0,064 - 0,135	0,357 - 0,641	1,378 - 2,326	2

(1) 减速机级数
(2) 传动比相关的数值可在 Tec Data Finder 中检索 – www.neugart.com
(3) T_{min} = -40°C. 理想运行温度最高为 50°C
(4) 距离减速机 1 m 时；在输入转速为 n_1=3000 min^{-1} 且无负荷时测得; i=5
(5) 最大电机重量* (单位 : kg) = 0.2 x M_b / 电机长度 (单位: m)
* 电机重量对称分布
* 水平和固定的安装位置
(6) 数据以 n_2=100 min^{-1} 的输出轴转速为准。
(7) 以输出轴中心为准
(8) 更改 T_{2N}, F_r, F_a 以及周期和轴承使用寿命时, 数值存在偏差(部分较高)。利用 NCP 针对应用进行专门设计 – www.neugart.com

(1) Number of stages
(2) The ratio-dependent values can be retrieved in Tec Data Finder – www.neugart.com
(3) T_{min} = -40°C. Optimal operating temperature max. 50°C
(4) Sound pressure level from 1 m, measured on input running at n_1=3000 rpm no load; i=5
(5) Max. motor weight* in kg = 0.2 x M_b / motor length in m
* with symmetrically distributed motor weight
* with horizontal and stationary mounting
(6) These values are based on an output shaft speed of n_2=100 rpm
(7) Based on center of output shaft
(8) Other (sometimes higher) values following changes to T_{2N}, F_r, F_a, cycle, and service life of bearing. Application specific configuration with NCP – www.neugart.com

输出扭矩	Output torques			PLHE060	PLHE080	PLHE120	i(1)	p(2)
额定输出扭矩(3)(4)	Nominal output torque(3)(4)	T_{2N}	Nm	28	85	115	3	1
				38	115	155	4	
				40	110	195	5	
				25	65	135	7	
				18	50	120	8	
				15	38	95	10	
				44	130	210	9	2
				44	120	260	12	
				44	110	230	15	
				44	120	260	16	
				44	120	260	20	
				40	110	230	25	
				44	120	260	32	
				40	110	230	40	
				18	50	120	64	
				15	38	95	100	
最大输出扭矩(4)(5)	Max. output torque(4)(5)	T_{2max}	Nm	45	136	184	3	1
				61	184	248	4	
				64	176	312	5	
				40	104	216	7	
				29	80	192	8	
				24	61	152	10	
				70	208	336	9	2
				70	192	416	12	
				70	176	368	15	
				70	192	416	16	
				70	192	416	20	
				64	176	368	25	
				70	192	416	32	
				64	176	368	40	
				29	80	192	64	
				24	61	152	100	

(1) 传动比 ($i=n_1/n_2$)
(2) 减速机级数
(3) 利用 NCP 针对应用进行专门设计 – www.neugart.com
(4) 平键 (代码 "A") 时的数值: 针对交变载荷
(5) 允许输出轴转动30.000转; 参见第 158 页

(1) Ratios ($i=n_1/n_2$)
(2) Number of stages
(3) Application specific configuration with NCP – www.neugart.com
(4) Values for feather key (code "A"): for repeated load
(5) 30,000 rotations of the output shaft permitted; see page 159

输出扭矩	Output torques			PLHE060	PLHE080	PLHE120	i[1]	p[2]
急停扭矩[3]	Emergency stop torque[3]	T_{2Stop}	Nm	66	180	390	3	1
				88	240	520	4	
				80	220	500	5	
				80	178	340	7	
				80	190	380	8	
				80	200	480	10	
				88	260	500	9	2
				88	240	520	12	
				88	220	500	15	
				88	240	520	16	
				88	240	520	20	
				80	220	500	25	
				88	240	520	32	
				80	220	500	40	
				80	190	380	64	
				80	200	480	100	

输入转速	Input speeds			PLHE060	PLHE080	PLHE120	i[1]	p[2]
T_{2N} 和 S1 时的平均热输入转速[4][5]	Average thermal input speed at T_{2N} and S1[4][5]	n_{1N}	min^{-1}	2950[6]	2450[6]	2150[6]	3	1
				3500[6]	2700[6]	2400[6]	4	
				4200[6]	3250[6]	2600[6]	5	
				4500	4000	3500[6]	7	
				4500	4000	3500[6]	8	
				4500	4000	3500	10	
				4500[6]	4000[6]	3050[6]	9	2
				4500	4000[6]	3200[6]	12	
				4500	4000	3500[6]	15	
				4500	4000	3500[6]	16	
				4500	4000	3500[6]	20	
				4500	4000	3500	25	
				4500	4000	3500	32	
				4500	4000	3500	40	
				4500	4000	3500	64	
				4500	4000	3500	100	
最高机械输入转速[4]	Max. mechanical input speed[4]	n_{1Limit}	min^{-1}	13000	7000	6500		1
				13000	7000	6500		2

(1) 传动比 ($i=n_1/n_2$)
(2) 减速机级数
(3) 允许 1000 次
(4) 利用 NCP 针对应用设计转速 – www.neugart.com
(5) 定义请参见第 158 页
(6) 在 50% T_{2N} 输出和 S1 模式下 的平均热传动转速

(1) Ratios ($i=n_1/n_2$)
(2) Number of stages
(3) Permitted 1000 times
(4) Application-specific speed configurations with NCP – www.neugart.com
(5) See page 159 for the definition
(6) Average thermal input speed at 50% T_{2N} and S1

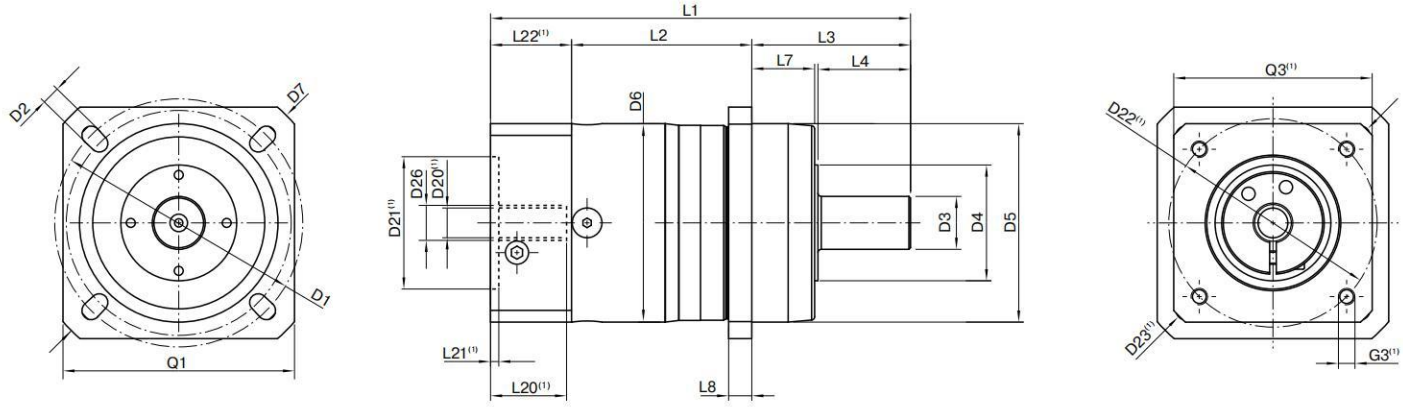

图示为带平键的 PLHE060 / 1 级 / 光滑输出轴 / 11 mm 锁紧系统 / 适配电机法兰 – 单一法兰 / B5 电机法兰类型
Drawing corresponds to a PLHE060 / 1-stage / smooth output shaft / 11 mm clamping system / motor adaptation – one part / B5 flange type motor

(1) 具体尺寸视电机/减速机法兰而定。可以在 www.neugart.com 下 Tec Data Finder。中针对每个电机适配电机特有的输入法兰几何尺寸。
(1) The dimensions vary with the motor/gearbox flange. The input flange dimensions can be retrieved for each specific motor in Tec Data Finder at www.neugart.com

几何尺寸(2)	Geometry(2)			PLHE060	PLHE080	PLHE120	p(3)	Code
输出端安装孔节圆直径	Pitch circle diameter output	D1		68 - 75	85	120		
输出端安装孔直径	Mounting bore output	D2	4x	5,5	6,5	9,0		
输出轴直径	Shaft diameter output	D3	k6	16	22	32		
输出轴轴肩直径	Shaft collar output	D4		35	40	45		
输出端定位凸台直径	Centering diameter output	D5	g7	60	70	90		
箱体直径	Housing diameter	D6		60	80	115		
输出法兰对角线尺寸	Diagonal dimension output	D7		92	100	140		
输出端法兰外方	Flange cross section output	Q1	■	70	80	110		
最小总长	Min. total length	L1		127	159	199,5	1	
				139,5	177	227	2	
箱体长度	Housing length	L2		55	69,5	64	1	
				67,5	87	91,5	2	
输出轴轴长	Shaft length output	L3		48	56	88		
输出端定位凸台深度	Centering depth output	L7		19	17,5	28		
输出端法兰厚度	Flange thickness output	L8		7	8	10		
电机轴直径j6/k6	Motor shaft diameter j6/k6	D20		更多信息见第 155/156 页 More information on page 155/156				
输入端锁紧系统直径	Clamping system diameter input	D26						
带平键的输出轴 (DIN 6885-1)	Output shaft with feather key (DIN 6885-1)			A 5x5x25	A 6x6x28	A 10x8x50		A
平键宽度 (DIN 6885-1)	Feather key width (DIN 6885-1)	B1		5	6	10		
含平键在内的轴高 (DIN 6885-1)	Shaft height including feather key (DIN 6885-1)	H1		18	24,5	35		
到轴肩的距离	Shaft length from shoulder	L4		28	36	58		
平键长度	Feather key length	L5		25	28	50		
到轴端的距离	Distance from shaft end	L6		2	4	4		
中心孔 (DIN 332, DR 形)	Center hole (DIN 332, type DR)	C		M5x12,5	M8x19	M12x28		
光滑输出轴	Smooth output shaft							B
到轴肩的距离	Shaft length from shoulder	L4		28	36	58		
花键输出轴 (DIN 5480)	Splined output shaft (DIN 5480)			W16x0,8x18x6m	W22x1,25x16x6m	W32x1,25x24x6m		C
花键或键槽的长度	Width of gearing	L_v		15	15	15		
输出轴轴长	Shaft length output	L3		48	56	88		
到轴肩的距离	Shaft length from shoulder	L4		26	26	26		
中心孔 (DIN 332, DR 形)	Center hole (DIN 332, type DR)	C		M5x12,5	M8x19	M12x28		

(2) 所有的尺寸单位为mm
(3) 减速机级数

(2) Dimensions in mm
(3) Number of stages