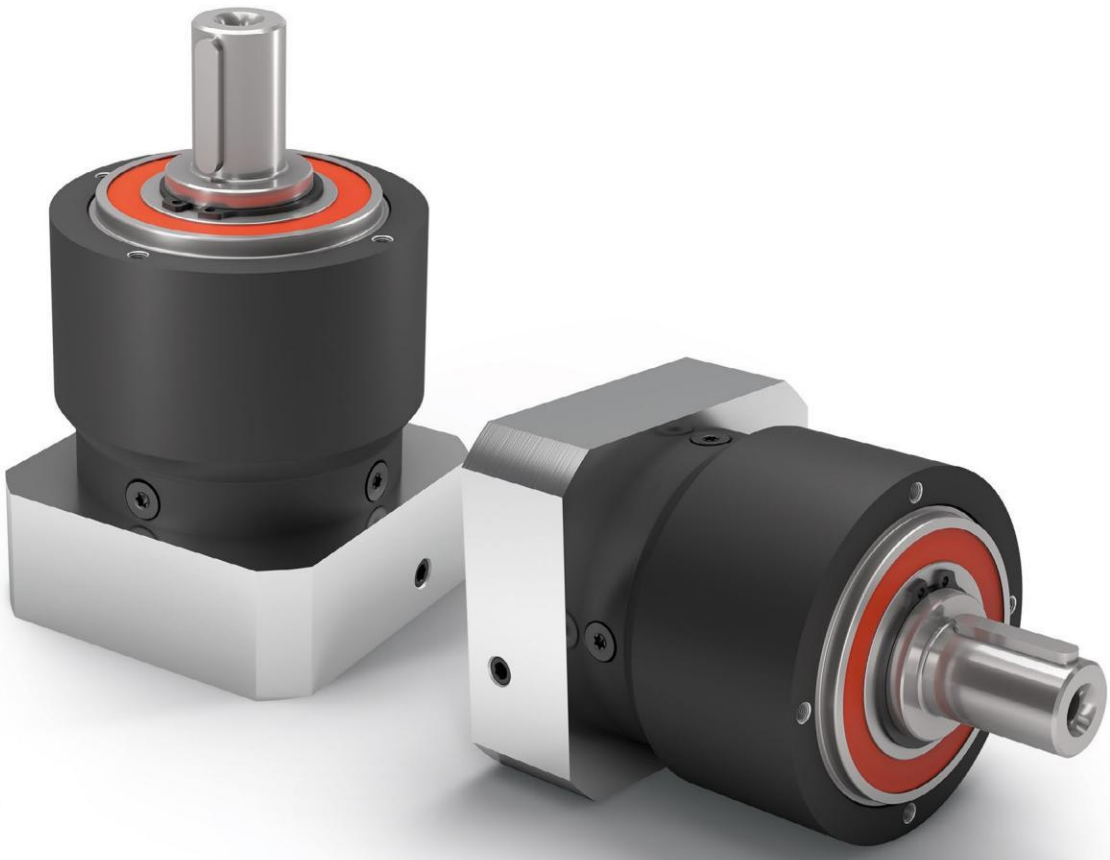

PLPE

经济型行星减速机
发热量低

PLPE 集合了经济型产品系列的最佳特性，同时在性能上又有所提升：它经济实用，同时又性能强劲，而且产生的热量也极少。其经过优化的输出轴承适用于径向力和轴向力较高的应用情况。

The cost effective planetary gearbox with the best torque-low heat performance

Our **PLPE** unites the best properties of the Economy Line with a performance advantage. It is cost effective, yet powerful, and generates minimal heat. The optimized output bearing has been designed for high radial and axial forces.

额定扭矩 Nominal output torque	**5 - 460 Nm**
径向力 Radial force	**800 - 5200 N**
轴向力 Axial force	**1000 - 7000 N**
回程间隙 Torsional backlash	**7 - 19 arcmin**
防护等级 Protection class	**IP54**

结构尺寸
Frame sizes

50	**70**	**90**	**120**	**155**

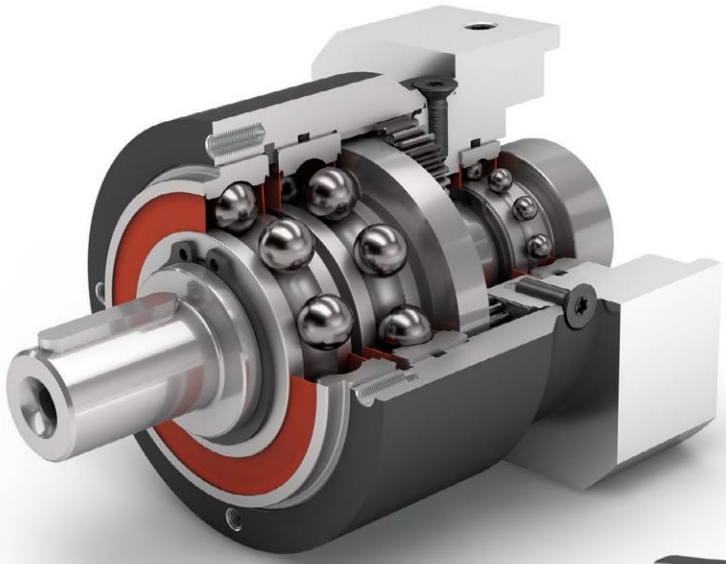

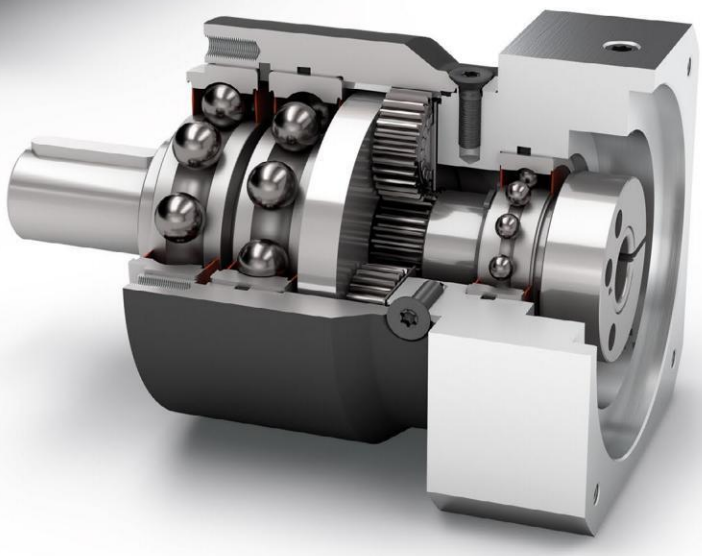

经济型
Economy Line

同轴减速机
Coaxial gearbox

旋转方向 同方向
Equidirectional rotation

直齿
Spur gear

圆形输出法兰
Round type output flange

增强深沟球轴承
Reinforced deep groove ball bearings

行星齿轮架
Planet carrier in disc design

技术特点的详细解释，请从第169页读起。
Detailed explanations of the technical features starting on page 169.

Code	减速机参数	Gearbox characteristics			PLPE050	PLPE070	PLPE090	PLPE120	PLPE155	p[1]
	使用寿命 (L_{10h})	Service life (L_{10h})	t_L	h	30.000					
	满载时效率[2]	Efficiency at full load[2]	η	%	98					1
					97					2
	最低工作温度	Min. operating temperature	T_{min}	°C	-25					
	最高工作温度	Max. operating temperature	T_{max}		90					
	防护等级	Protection class			IP54					
S	标准润滑	Standard lubrication			润滑脂（终生润滑）/ Grease (lifetime lubrication)					
F	食品级润滑	Food grade lubrication			润滑脂（终生润滑）/ Grease (lifetime lubrication)					
L	低温润滑[3]	Low temperature lubrication[3]			润滑脂（终生润滑）/ Grease (lifetime lubrication)					
	安装位置	Installation position			任意 / Any					
S	标准回程间隙	Standard backlash	j_t	arcmin	< 15	< 10	< 7	< 7	< 6	1
					< 19	< 12	< 9	< 9	< 9	2
	抗扭刚度[2]	Torsional stiffness[2]	c_g	Nm / arcmin	0,7 - 1,0	3,5 - 5,6	9,7 - 15,0	24,5 - 39,5	54,5 - 71,0	1
					0,7 - 1,1	3,3 - 5,8	9,7 - 16,1	21,0 - 43,5	55,0 - 73,0	2
	减速机重量[2]	Gearbox weight[2]	m_G	kg	0,6	1,4	3,2 - 3,3	7,4 - 7,5	16,8	1
					0,8 - 1,1	1,7 - 1,9	3,9 - 4,0	9,3 - 9,6	22,1 - 22,5	2
S	标准的箱体表面	Standard surface			箱体：钢 – 热处理后氧化（黑色） Housing: Steel – heat-treated and post-oxidized (black)					
	运行噪音[4]	Running noise[4]	Q_g	dB(A)	58	58	60	65	70	
	基于减速机输入法兰的最大弯矩[5]	Max. bending moment based on the gearbox input flange[5]	M_b	Nm	3	8	16	40	180	

输出轴载荷	Output shaft loads			PLPE050	PLPE070	PLPE090	PLPE120	PLPE155	p[1]
20,000 h 的径向力[6][7]	Radial force for 20,000 h[6][7]	$F_{r\,20.000\,h}$	N	800	1050	1900	2500	5200	
20,000 h 的轴向力[6][7]	Axial force for 20,000 h[6][7]	$F_{a\,20.000\,h}$		1000	1350	2000	4000	7000	
30,000 h 的径向力[6][7]	Radial force for 30,000 h[6][7]	$F_{r\,30.000\,h}$		700	900	1700	2150	4600	
30,000 h 的轴向力[6][7]	Axial force for 30,000 h[6][7]	$F_{a\,30.000\,h}$		800	1000	1500	3000	6000	
最大径向力[7][8]	Maximum radial force[7][8]	$F_{r\,Stat}$		1300	1650	3100	4000	8400	
最大轴向力[7][8]	Maximum axial force[7][8]	$F_{a\,Stat}$		1000	2100	3800	5900	11000	
20,000 h 倾斜力矩[6][8]	Tilting moment for 20,000 h[6][8]	$M_{K\,20.000\,h}$	Nm	26	42	99	168	497	
30,000 h 倾斜力矩[6][8]	Tilting moment for 30,000 h[6][8]	$M_{K\,30.000\,h}$		22	36	89	144	440	

转动惯量	Moment of inertia			PLPE050	PLPE070	PLPE090	PLPE120	PLPE155	p[1]
转动惯量[2]	Mass moment of inertia[2]	J	$kgcm^2$	0,015 - 0,030	0,069 - 0,174	0,374 - 0,789	1,419 - 2,764	4,932 - 7,611	1
				0,014 - 0,026	0,064 - 0,126	0,356 - 0,625	1,376 - 2,334	4,759 - 7,108	2

(1) 减速机级数
(2) 传动比相关的数值可在 Tec Data Finder 中检索 – www.neugart.com
(3) T_{min} = -40°C. 理想运行温度最高为 50°C
(4) 距离减速机 1 m 时; 在输入转速为 n_1=3000 min^{-1} 且无负荷时测得; i=5
(5) 最大电机重量* (单位 : kg) = 0.2 x M_b / 电机长度 (单位: m)
* 电机重量对称分布
* 水平和固定的安装位置
(6) 数据以 n_2=100 min^{-1} 的输出轴转速为准。
(7) 以输出轴中心为准
(8) 更改 T_{2N}, F_r, F_a 以及周期和轴承使用寿命时, 数值存在偏差(部分较高)。利用 NCP 针对应用进行专门设计 – www.neugart.com

(1) Number of stages
(2) The ratio-dependent values can be retrieved in Tec Data Finder – www.neugart.com
(3) T_{min} = -40°C. Optimal operating temperature max. 50°C
(4) Sound pressure level from 1 m, measured on input running at n_1=3000 rpm no load; i=5
(5) Max. motor weight* in kg = 0.2 x M_b / motor length in m
* with symmetrically distributed motor weight
* with horizontal and stationary mounting
(6) These values are based on an output shaft speed of n_2=100 rpm
(7) Based on center of output shaft
(8) Other (sometimes higher) values following changes to T_{2N}, F_r, F_a, cycle, and service life of bearing. Application specific configuration with NCP – www.neugart.com

输出扭矩	Output torques			PLPE050	PLPE070	PLPE090	PLPE120	PLPE155	i(1)	p(2)
额定输出扭矩(3)(4)	Nominal output torque(3)(4)	T_{2N}	Nm	11	28	85	115	-	3	1
				15	33	90	155	460	4	
				13	30	82	172	445	5	
				8,5	25	65	135	-	7	
				6	18	50	120	-	8	
				5	15	38	95	210	10	
				12	33	97	157	-	9	2
				15	33	90	195	-	12	
				13	33	82	172	-	15	
				15	33	90	195	460	16	
				15	33	90	195	460	20	
				13	30	82	172	445	25	
				15	33	90	195	-	32	
				13	30	82	172	460	40	
				-	-	-	-	445	50	
				7,5	18	50	120	-	64	
				5	15	38	95	210	100	
最大输出扭矩(4)(5)	Max. output torque(4)(5)	T_{2max}	Nm	17,5	45	136	184	-	3	1
				24	53	144	248	736	4	
				21	48	131	275	712	5	
				13,5	40	104	216	-	7	
				9,5	29	80	192	-	8	
				8	24	61	152	336	10	
				19	53	155	251	-	9	2
				24	53	144	312	-	12	
				21	53	131	275	-	15	
				24	53	144	312	736	16	
				24	53	144	312	736	20	
				21	48	131	275	712	25	
				24	53	144	312	-	32	
				21	48	131	275	736	40	
				-	-	-	-	712	50	
				12	29	80	192	-	64	
				8	24	61	152	336	100	

(1) 传动比 ($i=n_1/n_2$)
(2) 减速机级数
(3) 利用 NCP 针对应用进行专门设计 – www.neugart.com
(4) 平键 (代码 "A") 时的数值: 针对交变载荷
(5) 允许输出轴转动30.000转: 参见第 158 页

(1) Ratios ($i=n_1/n_2$)
(2) Number of stages
(3) Application specific configuration with NCP – www.neugart.com
(4) Values for feather key (code "A"): for repeated load
(5) 30,000 rotations of the output shaft permitted; see page 159

输出扭矩	Output torques			PLPE050	PLPE070	PLPE090	PLPE120	PLPE155	i(1)	p(2)
急停扭矩(3)	Emergency stop torque(3)	T_{2Stop}	Nm	22,5	66	180	390	-	3	1
				30	88	240	520	920	4	
				36	80	220	500	890	5	
				26	80	178	340	-	7	
				27	80	190	380	-	8	
				27	80	200	480	420	10	
				33	88	260	500	-	9	2
				40	88	240	520	-	12	
				36	88	220	500	-	15	
				40	88	240	520	920	16	
				40	88	240	520	920	20	
				36	80	220	500	890	25	
				40	88	240	520	-	32	
				36	80	220	500	920	40	
				-	-	-	-	890	50	
				27	80	190	380	-	64	
				27	80	200	480	420	100	

输入转速	Input speeds			PLPE050	PLPE070	PLPE090	PLPE120	PLPE155	i(1)	p(2)
T_{2N} 和 S1 时的平均热输入转速(4)(5)	Average thermal input speed at T_{2N} and S1(4)(5)	n_{1N}	min^{-1}	5000	4500(6)	3250(6)	2650(6)	-	3	1
				5000	4500(6)	3750(6)	2800(6)	1800(6)	4	
				5000	4500	4000(6)	3100(6)	2150(6)	5	
				5000	4500	4000	3500(6)	-	7	
				5000	4500	4000	3500	-	8	
				5000	4500	4000	3500	3000	10	
				5000	4500	4000(6)	3500(6)	-	9	2
				5000	4500	4000	3500(6)	-	12	
				5000	4500	4000	3500(6)	-	15	
				5000	4500	4000	3500(6)	2900(6)	16	
				5000	4500	4000	3500	3000(6)	20	
				5000	4500	4000	3500	3000(6)	25	
				5000	4500	4000	3500	-	32	
				5000	4500	4000	3500	3000	40	
				-	-	-	-	3000	50	
				5000	4500	4000	3500	-	64	
				5000	4500	4000	3500	3000	100	
最高机械输入转速(4)	Max. mechanical input speed(4)	n_{1Limit}	min^{-1}	18000	13000	7000	6500	5500		1
				18000	13000	7000	6500	5500		2

(1) 传动比 ($i=n_1/n_2$)
(2) 减速机级数
(3) 允许 1000 次
(4) 利用 NCP 针对应用设计转速 – www.neugart.com
(5) 定义请参见第 158 页
(6) 在 50% T_{2N} 输出和 S1 模式下 的平均热传动转速

(1) Ratios ($i=n_1/n_2$)
(2) Number of stages
(3) Permitted 1000 times
(4) Application-specific speed configurations with NCP – www.neugart.com
(5) See page 159 for the definition
(6) Average thermal input speed at 50% T_{2N} and S1

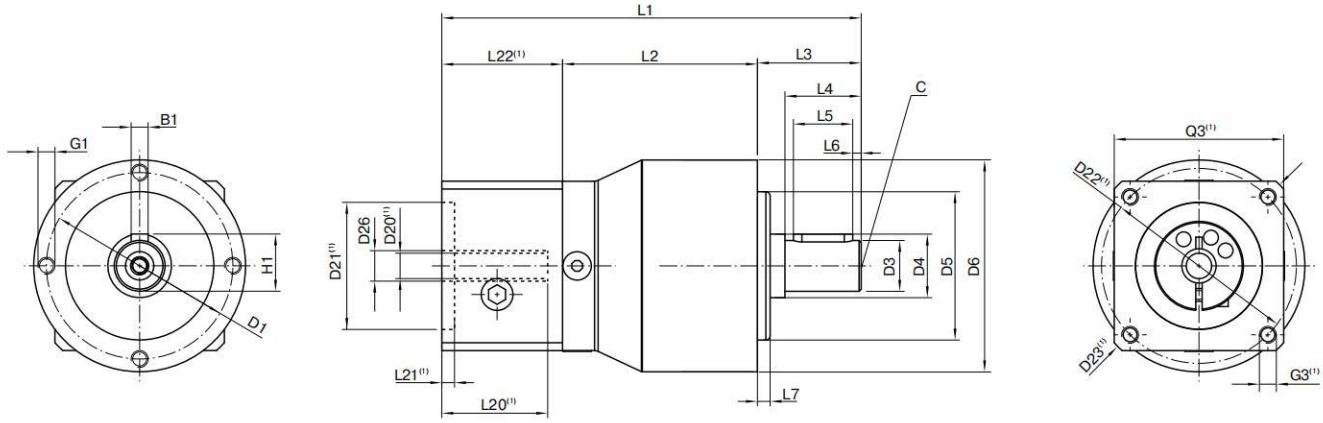

图示为带平键的 PLPE050 / 1 级 / 附带平键的输出轴 / 8 mm 锁紧系统 / 适配电机法兰 - 单一法兰 / B5 电机法兰类型
Drawing corresponds to a PLPE050 / 1-stage / output shaft with feather key / 8 mm clamping system / motor adaptation – one part / B5 flange type motor

(1)具体尺寸视电机/减速机法兰而定。可以在 www.neugart.com 下 Tec Data Finder。中针对每个电机适配电机特有的输入法兰几何尺寸。
(1) The dimensions vary with the motor/gearbox flange. The input flange dimensions can be retrieved for each specific motor in Tec Data Finder at www.neugart.com

几何尺寸(2)	Geometry(2)			PLPE050	PLPE070	PLPE090	PLPE120	PLPE155	p(3)	Code
输出端安装孔节圆直径	Pitch circle diameter output	D1		44	62	80	108	140		
输出轴直径	Shaft diameter output	D3	k7	12	16	22	32	40		
输出轴轴肩直径	Shaft collar output	D4		15	30	35	50	55		
输出端定位凸台直径	Centering diameter output	D5	h7	35	52	68	90	120		
箱体直径	Housing diameter	D6		50	70	90	120	155		
安装螺纹 x 深度	Mounting thread x depth	G1	4x	M4x8	M5x8	M6x9	M8x20	M10x20		
最小总长	Min. total length	L1		94	111	147	192	275,5	1	
				106,5	124	165	219,5	320	2	
箱体长度	Housing length	L2		46	51	67,5	76,5	100	1	
				58,5	64	85	104	144,5	2	
输出轴轴长	Shaft length output	L3		24,5	36	46	68	97		
输出端定位凸台深度	Centering depth output	L7		3	3	4	5	8		
电机轴直径j6/k6	Motor shaft diameter j6/k6	D20		更多信息见第 155/156 页 More information on page 155/156						
输入端锁紧系统直径	Clamping system diameter input	D26								
带平键的输出轴 (DIN 6885-1)	Output shaft with feather key (DIN 6885-1)			A 4x4x14	A 5x5x25	A 6x6x32	A 10x8x50	A 12x8x70		A
平键宽度 (DIN 6885-1)	Feather key width (DIN 6885-1)	B1		4	5	6	10	12		
含平键在内的轴高 (DIN 6885-1)	Shaft height including feather key (DIN 6885-1)	H1		13,5	18	24,5	35	43		
到轴肩的距离	Shaft length from shoulder	L4		18	28	36	58	82		
平键长度	Feather key length	L5		14	25	32	50	70		
到轴端的距离	Distance from shaft end	L6		2	2	2	4	6		
中心孔 (DIN 332, DR 形)	Center hole (DIN 332, type DR)	C		M4x10	M5x12,5	M8x19	M12x28	M16x36		
光滑输出轴	Smooth output shaft									B
到轴肩的距离	Shaft length from shoulder	L4		18	28	36	58	82		

(2) 所有的尺寸单位为mm
(3) 减速机级数

(2) Dimensions in mm
(3) Number of stages