WPLQE

直角行星减速机，带方形通孔输出法兰安装灵活，适用于承载力很大的工况中

WPLQE 是一款配有正方形输出法兰的直角减速机。因此，其安装十分便捷，可多面使用，而且由于配有较大规格的深沟球轴承，还能承受较高的径向力和轴向力。

The right angle planetary gearbox with universal output flange – flexible installation options and for high forces

The **WPLQE** is our right angle gearbox with the square output flange. This makes it particularly easy to install for a wide range of applications, and its large deep groove ball bearings also make it ideal for high radial and axial forces.

额定扭矩 Nominal output torque	**14 - 260 Nm**
径向力 Radial force	**900 - 2950 N**
轴向力 Axial force	**1000 - 2500 N**
回程间隙 Torsional backlash	**11 - 21 arcmin**
防护等级 Protection class	**IP54**

结构尺寸
Frame sizes

60 **80** **120**

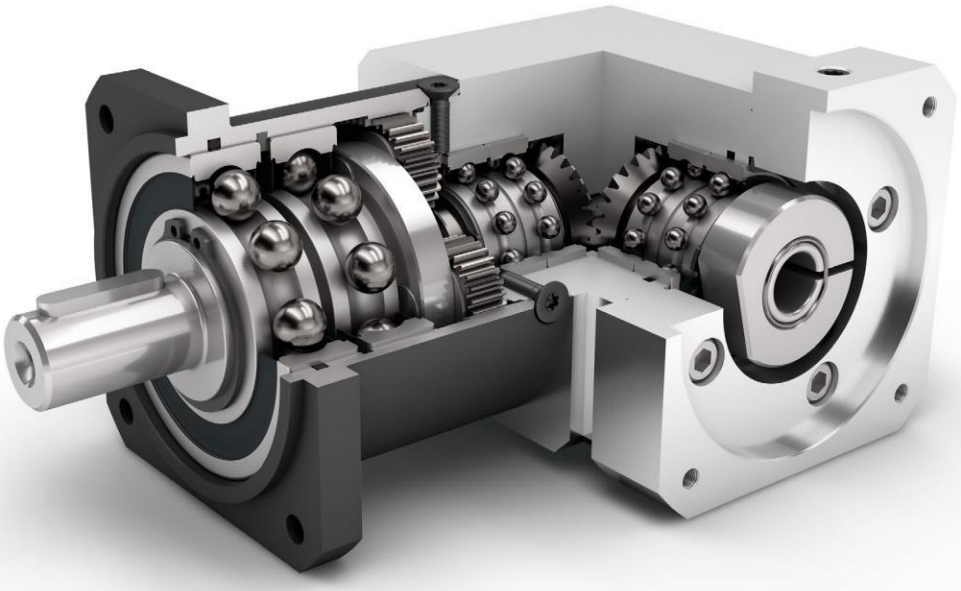

经济型
Economy Line

直角型减速机
Right angle gearbox

旋转方向 同方向
Equidirectional rotation

直齿
Spur gear

锥齿轮 直角箱
Bevel gear right angle stage

正方形输出法兰
Square type output flange

增强深沟球轴承
Reinforced deep groove ball bearings

多样的传动比（i=3 至 i=512）
High ratio variety i=3 up to i=512

行星齿轮架
Planet carrier in disc design

技术特点的详细解释，请从第169页读起。
Detailed explanations of the technical features starting on page 169.

Code	减速机参数	Gearbox characteristics			WPLQE060	WPLQE080	WPLQE120	p[1]
	使用寿命 (L_{10h})	Service life (L_{10h})	t_L	h	20.000			
	T_{2N} x 0, 88 时的使用寿命	Service life at T_{2N} x 0,88			30.000			
	满载时效率[2]	Efficiency at full load[2]	η	%	95			1
					94			2
					88			3
	最低工作温度	Min. operating temperature	T_{min}	°C	-25			
	最高工作温度	Max. operating temperature	T_{max}		90			
	防护等级	Protection class			IP54			
S	标准润滑	Standard lubrication			润滑脂 (终生润滑) / Grease (lifetime lubrication)			
F	食品级润滑	Food grade lubrication			润滑脂 (终生润滑) / Grease (lifetime lubrication)			
L	低温润滑[3]	Low temperature lubrication[3]			润滑脂 (终生润滑) / Grease (lifetime lubrication)			
	安装位置	Installation position			任意 / Any			
S	标准回程间隙	Standard backlash	j_t	arcmin	< 16	< 13	< 11	1
					< 18	< 15	< 13	2
					< 21	< 17	< 15	3
	抗扭刚度[2]	Torsional stiffness[2]	c_g	Nm / arcmin	1,9 - 3,1	4,4 - 9,4	9,3 - 15,3	1
					3,1 - 3,8	8,0 - 11,9	14,7 - 18,0	2
					3,3 - 4,1	9,4 - 13,3	15,6 - 19,0	3
	减速机重量[2]	Gearbox weight[2]	m_G	kg	1,8	4,2 - 4,5	10,4 - 10,5	1
					2,0	5,0	12,2 - 12,4	2
					2,2	5,5	14,0 - 14,2	3
S	标准的箱体表面	Standard surface			箱体:钢 – 热处理后氧化（黑色） Housing: Steel – heat-treated and post-oxidized (black)			
	运行噪音[4]	Running noise[4]	Q_g	dB(A)	70	73	75	
	基于减速机输入法兰的最大弯矩[5]	Max. bending moment based on the gearbox input flange[5]	M_b	Nm	5	10,5	26	

输出轴载荷	Output shaft loads			WPLQE060	WPLQE080	WPLQE120	p[1]
20,000 h 的径向力[6][7]	Radial force for 20,000 h[6][7]	$F_{r\,20.000\,h}$	N	900	2050	2950	
20,000 h 的轴向力[6][7]	Axial force for 20,000 h[6][7]	$F_{a\,20.000\,h}$		1000	2500	2500	
30,000 h 的径向力[6][7]	Radial force for 30,000 h[6][7]	$F_{r\,30.000\,h}$		700	1700	2400	
30,000 h 的轴向力[6][7]	Axial force for 30,000 h[6][7]	$F_{a\,30.000\,h}$		800	2000	2100	
最大径向力[7][8]	Maximum radial force[7][8]	$F_{r\,Stat}$		1500	2500	4000	
最大轴向力[7][8]	Maximum axial force[7][8]	$F_{a\,Stat}$		1950	3800	3800	
20,000 h 倾斜力矩[6][8]	Tilting moment for 20,000 h[6][8]	$M_{K\,20.000\,h}$	Nm	37	101	232	
30,000 h 倾斜力矩[6][8]	Tilting moment for 30,000 h[6][8]	$M_{K\,30.000\,h}$		29	84	188	

转动惯量	Moment of inertia			WPLQE060	WPLQE080	WPLQE120	p[1]
转动惯量[2]	Mass moment of inertia[2]	J	$kgcm^2$	0,222 - 0,370	0,921 - 1,402	1,823 - 2,878	1
				0,222 - 0,351	0,917 - 1,244	1,855 - 2,776	2
				0,222 - 0,232	0,916 - 1,210	1,854 - 2,681	3

(1) 减速机级数
(2) 传动比相关的数值可在 Tec Data Finder 中检索 – www.neugart.com
(3) T_{min} = -40°C. 理想运行温度最高为 50°C
(4) 距离减速机 1 m 时; 在输入转速为 n_1=3000 min^{-1} 且无负荷时测得; i=5
(5) 最大电机重量* (单位 : kg) = 0.2 x M_b / 电机长度 (单位: m)
* 电机重量对称分布
* 水平和固定的安装位置
(6) 数据以 n_2=100 min^{-1} 的输出轴转速为准。
(7) 以输出轴中心为准
(8) 更改 T_{2N}, F_r, F_a 以及周期和轴承使用寿命时, 数值存在偏差 (部分较高)。利用 NCP 针对应用进行专门设计 – www.neugart.com

(1) Number of stages
(2) The ratio-dependent values can be retrieved in Tec Data Finder – www.neugart.com
(3) T_{min} = -40°C. Optimal operating temperature max. 50°C
(4) Sound pressure level from 1 m, measured on input running at n_1=3000 rpm no load; i=5
(5) Max. motor weight* in kg = 0.2 x M_b / motor length in m
* with symmetrically distributed motor weight
* with horizontal and stationary mounting
(6) These values are based on an output shaft speed of n_2=100 rpm
(7) Based on center of output shaft
(8) Other (sometimes higher) values following changes to T_{2N}, F_r, F_a, cycle, and service life of bearing. Application specific configuration with NCP – www.neugart.com

输出扭矩	Output torques			WPLQE060	WPLQE080	WPLQE120	i[1]	p[2]
额定输出扭矩[3][4]	Nominal output torque[3][4]	T_{2N}	Nm	14	40[5]	80[5]	3	1
				19	53[5]	105[5]	4	
				24	67[5]	130[5]	5	
				25	65	135	7	
				18	50	120	8	
				15	38	95	10	
				44[5]	130[5]	210[5]	9	2
				44	120[5]	260[5]	12	
				44	110	230	15	
				44	120	260	16	
				44	120	260	20	
				40	110	230	25	
				44	120	260	32	
				40	110	230	40	
				18	50	120	64	
				44	110	260	60	3
				44	120	260	80	
				44	120	260	100	
				44	110	230	120	
				44	120	260	160	
				40	110	230	200	
				44	120	260	256	
				40	110	230	320	
				18	50	120	512	
最大输出扭矩[4][6]	Max. output torque[4][6]	T_{2max}	Nm	22	64	128	3	1
				30	85	168	4	
				38	107	208	5	
				40	104	216	7	
				29	80	192	8	
				24	61	152	10	
				70	208	336	9	2
				70	192	416	12	
				70	176	368	15	
				70	192	416	16	
				70	192	416	20	
				64	176	368	25	
				70	192	416	32	
				64	176	368	40	
				29	80	192	64	
				70	176	416	60	3
				70	192	416	80	
				70	192	416	100	
				70	176	368	120	
				70	192	416	160	
				64	176	368	200	
				70	192	416	256	
				64	176	368	320	
				29	80	192	512	

(1) 传动比 ($i=n_1/n_2$)
(2) 减速机级数
(3) 利用 NCP 针对应用进行专门设计 – www.neugart.com
(4) 平键 (代码 "A")时的数值: 针对交变载荷
(5) T_{2N} 作用时 寿命不是10.000 h
(6) 允许输出轴转动30.000转; 参见第 158 页

(1) Ratios ($i=n_1/n_2$)
(2) Number of stages
(3) Application specific configuration with NCP – www.neugart.com
(4) Values for feather key (code "A"): for repeated load
(5) Different service life: 10,000 h at T_{2N}
(6) 30,000 rotations of the output shaft permitted; see page 159

输出扭矩	Output torques			WPLQE060	WPLQE080	WPLQE120	i(1)	p(2)
急停扭矩(3)	Emergency stop torque(3)	T_{2Stop}	Nm	66	180	360	3	1
				86	240	474	4	
				80	220	500	5	
				80	178	340	7	
				80	190	380	8	
				70	170	430	10	
				88	260	500	9	2
				88	240	520	12	
				88	220	500	15	
				88	240	520	16	
				88	240	520	20	
				80	220	500	25	
				88	240	520	32	
				80	220	500	40	
				80	190	380	64	
				88	220	520	60	3
				88	240	520	80	
				88	240	520	100	
				88	220	500	120	
				88	240	520	160	
				80	220	500	200	
				88	240	520	256	
				80	220	500	320	
				80	190	380	512	

输入转速	Input speeds			WPLQE060	WPLQE080	WPLQE120	i(1)	p(2)
T_{2N} 和 S1 时的平均热输入转速(4)(5)	Average thermal input speed at T_{2N} and S1(4)(5)	n_{1N}	min^{-1}	4500(6)	3100(6)	2850(6)	3	1
				4500(6)	3250(6)	2950(6)	4	
				4500(6)	3350(6)	3050(6)	5	
				4500	4000(6)	3500(6)	7	
				4500	4000(6)	3500(6)	8	
				4500	4000	3500	10	
				4500(6)	3150(6)	2950(6)	9	2
				4500(6)	3750(6)	3050(6)	12	
				4500	4000(6)	3500(6)	15	
				4500	4000(6)	3450(6)	16	
				4500	4000(6)	3500(6)	20	
				4500	4000	3500(6)	25	
				4500	4000	3500	32	
				4500	4000	3500	40	
				4500	4000	3500	64	
				4500	4000	3500	60	3
				4500	4000	3500	80	
				4500	4000	3500	100	
				4500	4000	3500	120	
				4500	4000	3500	160	
				4500	4000	3500	200	
				4500	4000	3500	256	
				4500	4000	3500	320	
				4500	4000	3500	512	
最高机械输入转速(4)	Max. mechanical input speed(4)	n_{1Limit}	min^{-1}	13000	7000	6500		1
				13000	7000	6500		2
				13000	7000	6500		3

(1) 传动比 ($i=n_1/n_2$)
(2) 减速机级数
(3) 允许 1000 次
(4) 利用 NCP 针对应用设计转速 – www.neugart.com
(5) 定义请参见第 158 页
(6) 在 50% T_{2N} 输出和 S1 模式下 的平均热传动转速

(1) Ratios ($i=n_1/n_2$)
(2) Number of stages
(3) Permitted 1000 times
(4) Application-specific speed configurations with NCP – www.neugart.com
(5) See page 159 for the definition
(6) Average thermal input speed at 50% T_{2N} and S1

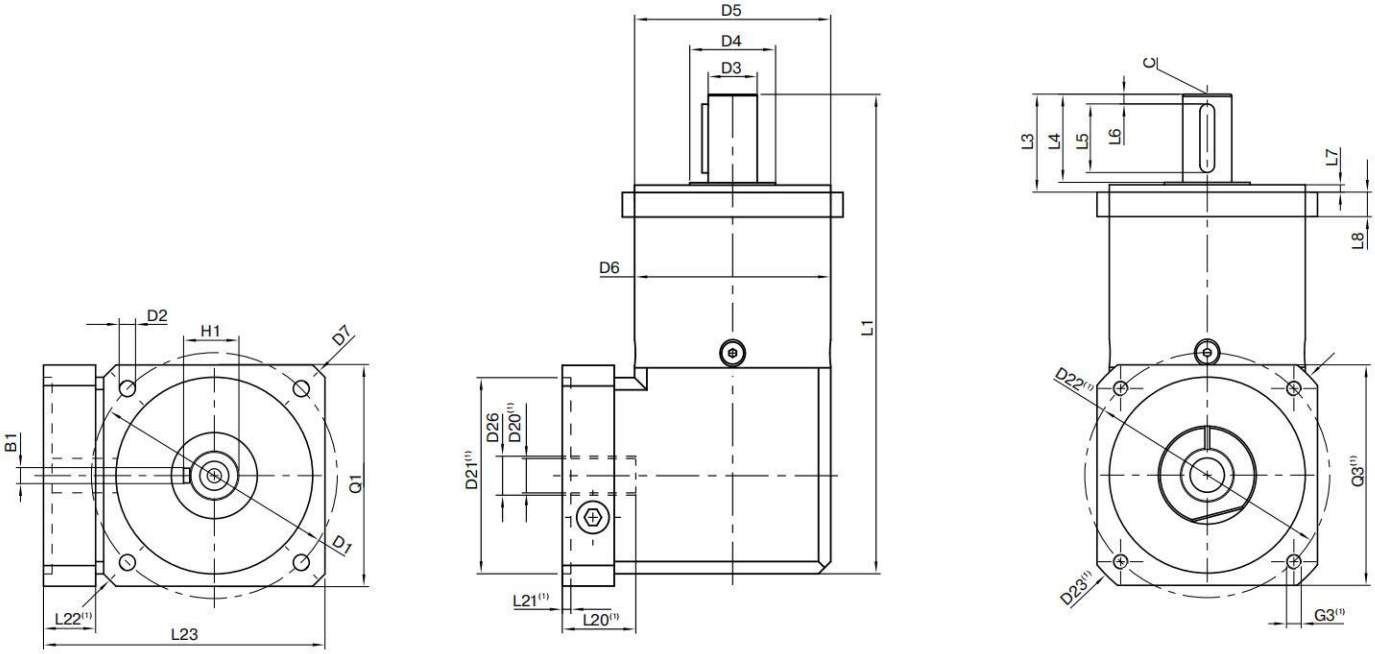

图示为带平键的 WPLQE080 / 1 级 / 附带平键的输出轴 / 19 mm 锁紧系统 / 适配电机法兰– 2 件式 – 正方形通用法兰 / B5 电机法兰类型
Drawing corresponds to a WPLQE080 / 1-stage / output shaft with feather key / 19 mm clamping system / motor adaptation – 2-part – square universal flange / B5 flange type motor

(1) 具体尺寸视电机/减速机法兰而定。可以在 www.neugart.com 下 Tec Data Finder。中针对每个电机适配电机特有的输入法兰几何尺寸。
(1) The dimensions vary with the motor/gearbox flange. The input flange dimensions can be retrieved for each specific motor in Tec Data Finder at www.neugart.com

几何尺寸(2)	Geometry(2)			WPLQE060	WPLQE080	WPLQE120	p(3)	Code
输出端安装孔节圆直径	Pitch circle diameter output	D1		75	100	130		
输出端安装孔直径	Mounting bore output	D2	4x	5,5	6,5	8,5		
输出轴直径	Shaft diameter output	D3	h7	16	20	25		
输出轴轴肩直径	Shaft collar output	D4		20	35	35		
输出端定位凸台直径	Centering diameter output	D5	h7	60	80	110		
箱体直径	Housing diameter	D6		60	80	115		
输出法兰对角线尺寸	Diagonal dimension output	D7		92	116	145		
输出端法兰外方	Flange cross section output	Q1	■	70	90	115		
总长	Total length	L1		152	195,5	274,5	1	
				164,5	213	302,5	2	
				177	230,5	330	3	
输出轴轴长	Shaft length output	L3		32	40	55		
输出端定位凸台深度	Centering depth output	L7		3	3	4		
输出端法兰厚度	Flange thickness output	L8		10	10	15		
最小总高度	Min. overall height	L23		90,5	114,5	145,5		
电机轴直径 j6/k6	Motor shaft diameter j6/k6	D20		更多信息见第 155/156 页 More information on page 155/156				
输入端锁紧系统直径	Clamping system diameter input	D26						
带平键的输出轴 (DIN 6885-1)	Output shaft with feather key (DIN 6885-1)			A 5x5x20	A 6x6x28	A 8x7x40		A
平键宽度 (DIN 6885-1)	Feather key width (DIN 6885-1)	B1		5	6	8		
含平键在内的轴高 (DIN 6885-1)	Shaft height including feather key (DIN 6885-1)	H1		18	22,5	28		
到轴肩的距离	Shaft length from shoulder	L4		28	36	50		
平键长度	Feather key length	L5		20	28	40		
到轴端的距离	Distance from shaft end	L6		4	4	5		
中心孔 DIN 332, DR 形)	Center hole (DIN 332, type DR)	C		M5x12,5	M6x16	M10x22		
光滑输出轴	Smooth output shaft							B
到轴肩的距离	Shaft length from shoulder	L4		28	36	50		

(2) 所有的尺寸单位为mm
(3) 减速机级数

(2) Dimensions in mm
(3) Number of stages