NGV

用于工业地面运输车的行星减速机。结构紧凑，承载能力强

AGV（自动导引车）对驱动技术提出了特殊的要求。这些要求主要有：承受较高的径向负荷，节省空间的设计，可以全天不间断运行，且节约能源。我们的 **NGV** 行星减速机采用特殊的输出轴承设计理念，而且可以直接安装在车辆底盘上，因此能够精确地满足这些要求。

The planetary gearbox for industrial fork lift trucks. Compact and extremely resilient.

AGVs have special requirements when it comes to drive technology. These include high radial loads, space-saving design, 24/7 use and energy efficiency. With its special output bearing concept and the option of direct mounting to the vehicle chassis, our **NGV** planetary gearbox precisely meets these requirements.

额定扭矩
Nominal output torque **18 - 260 Nm**

径向力
Radial force **2300 - 5150 N**

轴向力
Axial force **2850 - 6450 N**

回程间隙
Torsional backlash **9 - 12 arcmin**

防护等级
Protection class **IP65**

动态载荷视减速机型号而定
Dynamic load capacity per gearbox

最大动态载荷	**Max. dynamic load capacity**	kg
减速机包括配轮 NGV064 Ø 160 mm	NGV064 incl. wheel Ø 160 mm	350
减速机包括配轮 NGV090 Ø 200 mm	NGV090 incl. wheel Ø 200 mm	675
减速机包括配轮 NGV110 Ø 250 mm	NGV110 incl. wheel Ø 250 mm	1075

结构尺寸
Frame sizes

64 **90** **110**

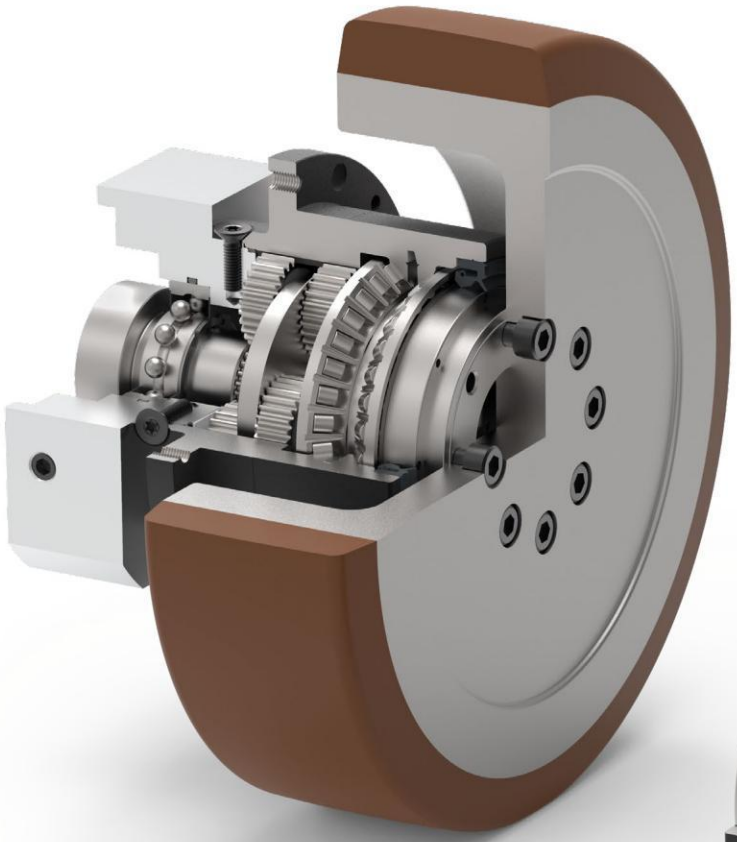

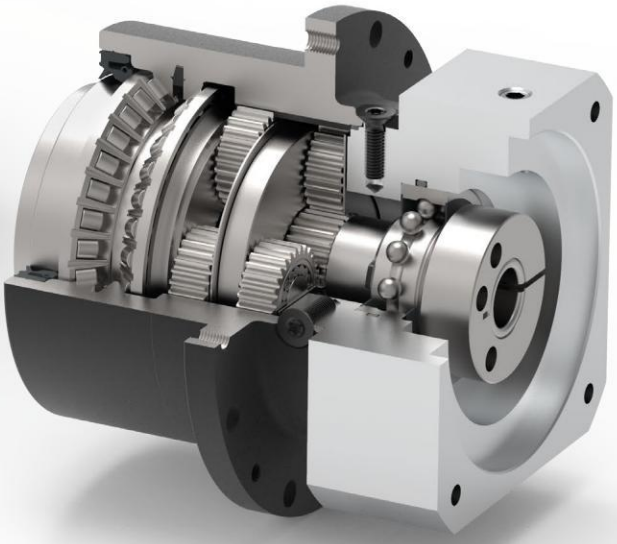

针对特定应用的减速机
Application-specific gearbox

直齿
Spur gear

圆形特大号输出法兰
Extra large round type output flange

配有预紧的角接触滚子轴承
Preloaded angular contact roller bearings

径向轴密封
Rotary shaft seal

输出端带有超长定心环
Extra long centering collar

法兰输出轴（按 ISO 9409 标准）
Flange output shaft (ISO 9409)

行星齿轮架
Planet carrier in disc design

技术特点的详细解释，请从第169页读起。
Detailed explanations of the technical features starting on page 169.

NGV:
完美的AGV减速机

NGV: The perfect gearbox for AGVs.

+ 直接安装

使用安装接口，可以把减速机直接安装在车辆上。不需要另外的适配器。

+ Direct mounting

The mounting interface allows direct mounting of the gearbox to the vehicle. No additional adapters are required.

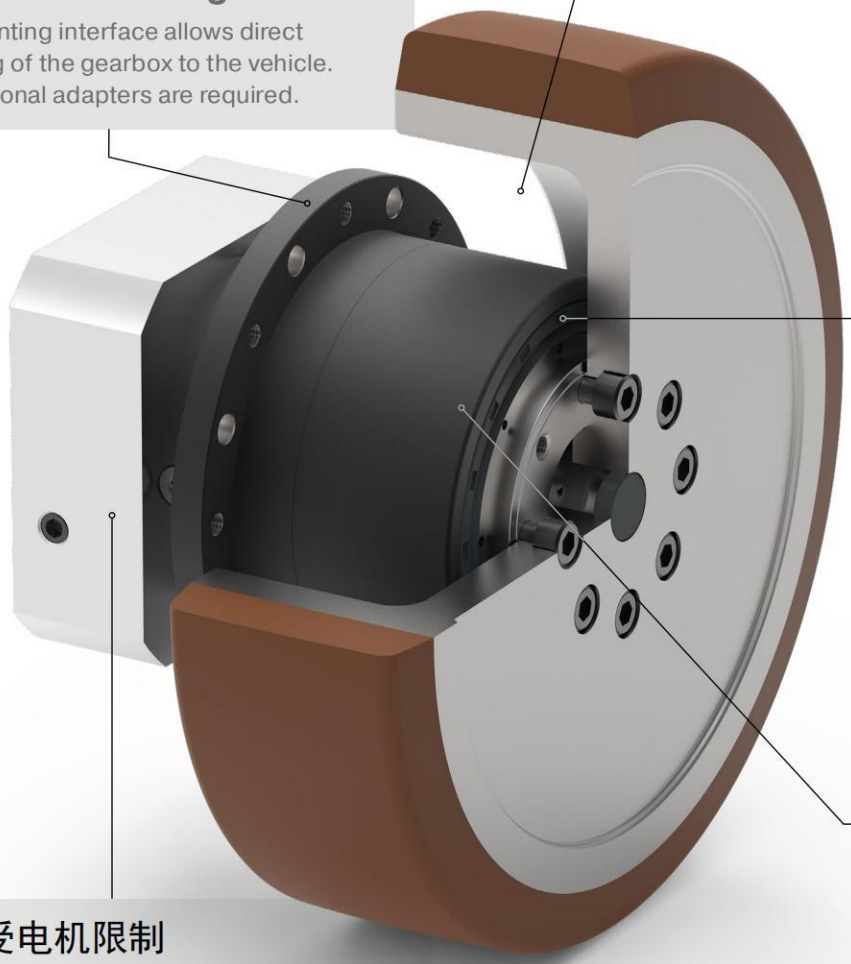

+ 减少安装空间

减速机几乎完全被配轮包围住。因此，车辆内部所需的安装空间被降至最小。

+ Reduction of installation space

The gearbox is almost completely enclosed by the wheel. The required installation space in the vehicle is therefore reduced to a minimum.

+ 承载能力高

预胀紧的两个角接触滚子轴承可以承受较高的径向力。

+ High load capacity

The preloaded, double-designed angular contact roller bearings permit very high radial forces.

+ 高效率，可信赖

实践证明，Neugart 经济 系列的各类减速机都具有较高的效率。它们可以永久润滑，因此不需要维护，在连续运行的情况下仍然极其可靠。

+ High efficiency and reliability

The proven gearbox type from the Neugart Economy series is characterized by a high efficiency. Thanks to its lifetime lubrication, it is also maintenance-free and extremely reliable, even in continuous operation.

+ 不受电机限制

搭配各种不同的电机适配器，
几乎可以组装在任何型号的电机上，
甚至可以直接安装在电机上。

+ Motor independent

By using different motor adapters it is possible to mount almost any motor. Direct mounting of the motor is also possible.

为客户专门定制的 AGV 减速机解决方案。

Neugart 具备扎实的工程与制造方面的专业知识和技能，能够为您研发与定制减速机，是您实力强劲的合作伙伴，同样适合您的车辆

Customer-specific AGV gearbox solutions.

Because ot the comprehensive engineering and manufacturing know-how, Neugart is your competent partner for the development and manufacture of customized gearboxes. Also for your vehicle.

定制减速机研发示例。

Example of a custom gearbox development.

NGV（带配轮的减速机） NGV gearbox incl. wheel

性能(减速机包括配轮)	Characteristics (gearbox incl. wheel)			NGV064	NGV090	NGV110
最大动态载荷[1]	Maximum dynamic load capacity[1]		kg	350	675	1075
最大速度	Max. speed	v	m/s	2		
定位精度	Positioning precision		mm	0,3	0,4	0,4
总重量	Total weight		kg	3,9	7,7	16,4

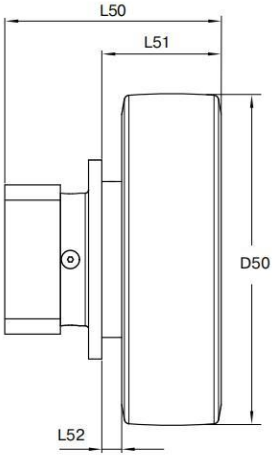

几何尺寸	Geometry			NGV064	NGV090	NGV110
配轮直径	Wheel diameter	D50	mm	160	200	250
最小总长	Min. total length	L50		98,5	130,5	158,0
法兰到配轮外边缘的距离	Distance between flange and outer edge	L51		58,0	72,0	94,0
法兰到配轮内边缘的距离	Distance between flange and inner edge	L52		8,0	12,0	14,0

NGV（减速机） NGV gearbox

Code	减速机参数	Gearbox characteristics			NGV064	NGV090	NGV110
	传动比	Ratios	i		9; 12; 15; 16; 20; 25; 32; 40; 64		
	使用寿命 (L_{10h})	Service life (L_{10h})	t_L	h	30.000		
	满载时效率[2]	Efficiency at full load[2]	η	%	⩾95		
	最低工作温度	Min. operating temperature	T_{min}	°C	-25		
	最高工作温度	Max. operating temperature	T_{max}		90		
	防护等级	Protection class			IP65（从动轮上）/ IP65 (at the output side)		
S	防护等级	Standard lubrication			润滑脂(终生润滑) / Grease (lifetime lubrication)		
F	食品级润滑	Food grade lubrication			润滑脂(终生润滑) / Grease (lifetime lubrication)		
L	低温润滑[3]	Low temperature lubrication[3]			润滑脂(终生润滑) / Grease (lifetime lubrication)		
	安装位置	Installation position			任意 / any		
S	标准回程间隙	Standard backlash	j_t	arcmin	⩽12	⩽9	⩽9
	抗扭刚度[2]	Torsional stiffness[2]	c_g	Nm / arcmin	7,3 - 11,5	19,5 - 38,5	52 - 95
	减速机重量[2]	Gearbox weight[2]	m_G	kg	1,6 - 1,7	4,0	8,5 - 8,7
S	标准的箱体表面	Standard surface			箱体:钢 – 热处理后氧化（黑色 / Housing: Steel – heat-treated and post-oxidized (black)		
	运行噪音[4]	Running noise[4]	Q_g	dB(A)	60	62	65
	基于减速机输入法兰的最大弯矩[5]	Max. bending moment based on the gearbox input flange[5]	M_b	Nm	8	16	40

(1) 带有配轮的 NGV 减速机的最大载荷。载荷为动态载荷，采用额定转矩 T_{2N}。必须使用 NCP，针对特定的应用进行设计。F_a=0
(2) 传动比相关的数值可在 Tec Data Finder 中检索 www.neugart.com
(3) T_{min} = -40°C. 理想运行温度最高为 50°C
(4) 距离减速机1 m 时；在输入转速为 n1=3000 min-1 且无负荷时测得；i=25
(5) M最大电机重量* (单位：kg) = 0.2 x Mb /电机长度（单位：m）
* 电机重量对称分布
* 水平和固定的安装位置

(1) Max. load capacity of NGV gearbox with NGV wheel and dynamic load with nominal torque T_{2N}. Application-specific design with NCP required. With F_a=0
(2) The ratio-dependent values can be retrieved in Tec Data Finder – www.neugart.com
(3) T_{min} = -40°C. Optimal operating temperature max. 50°C
(4) Sound pressure level from 1 m, measured on input running at n_1=3000 rpm no load; i=25
(5) Max. motor weight* in kg = 0.2 x M_b / motor length in m
* with symmetrically distributed motor weight
* with horizontal and stationary mounting

NGV（减速机） NGV gearbox

输出扭矩	Output torques			NGV064	NGV090	NGV110	i[1]
额定输出扭矩[2]	Nominal output torque[2]	T_{2N}	Nm	44	130	210	9
				44	120	260	12
				44	110	230	15
				44	120	260	16
				44	120	260	20
				40	110	230	25
				44	120	260	32
				40	110	230	40
				18	50	120	64
最大输出扭矩[2]	Max. output torque[2]	T_{2max}	Nm	70	208	384	9
				70	192	416	12
				70	176	368	15
				70	192	416	16
				70	192	416	20
				64	176	368	25
				70	192	416	32
				64	176	368	40
				29	80	192	64

输出扭矩	Output torques			NGV064	NGV090	NGV110
急停扭矩[3][4]	Emergency stop torque[3][4]	T_{2Stop}	Nm	80 - 88	190 - 260	380 - 500

输入转速	Input speeds			NGV064	NGV090	NGV110
T_{2N} 和 S1 时的平均热输入转速[2]	Average thermal input speed at T_{2N} and S1[2]	n_{1N}	min^{-1}	4500	4000	3300 - 3500
最高机械输入转速[2]	Max. mechanical input speed[2]	n_{1Limit}		7500	7000	6500

输出轴载荷	Output shaft loads			NGV064	NGV090	NGV110
20,000 h 的径向力[5][6]	Radial force for 20,000 h[5][6]	$F_{r\,20.000\,h}$	N	2300	4100	5150
20,000 h 的轴向力[5][6]	Axial force for 20,000 h[5][6]	$F_{a\,20.000\,h}$		2850	5450	6450
30,000 h 的径向力[5][6]	Radial force for 30,000 h[5][6]	$F_{r\,30.000\,h}$		2000	3650	4550
30,000 h 的轴向力[5][6]	Axial force for 30,000 h[5][6]	$F_{a\,30.000\,h}$		2500	4800	5600
最大径向力[6][7]	Maximum radial force[6][7]	$F_{r\,Stat}$		2700	4950	7200
最大轴向力[6][7]	Maximum axial force[6][7]	$F_{a\,Stat}$		2850	5450	6450
20,000 h 倾斜力矩[5][7]	Tilting moment for 20,000 h[5][7]	$M_{K\,20.000\,h}$	Nm	110	278	407
30,000 h 倾斜力矩[5][7]	Tilting moment for 30,000 h[5][7]	$M_{K\,30.000\,h}$		96	248	360

转动惯量	Moment of inertia			NGV064	NGV090	NGV110
转动惯量[3]	Mass moment of inertia[3]	J	$kgcm^2$	0,066 - 0,132	0,367 - 0,667	1,416 - 2,432

(1) 传动比 ($i=n_1/n_2$)
(2) 利用 NCP 针对应用设计转速 – www.neugart.com.
(3) 传动比相关的数值可在 Tec Data Finder 中检索 – www.neugart.com
(4) 允许 1000 次
(5) 数据以 n_2=100 min-1 的输出轴转速为准。
(6) 基于输出轴末端
(7) 更改 T_{2N}, F_r, F_a 以及周期和轴承使用寿命时，数值存在偏差（部分较高）。利用 NCP 针对应用进行专门设计 – www.neugart.com

(1) Ratios ($i=n_1/n_2$)
(2) Ratio-dependent. Application-specific speed configurations with NCP – www.neugart.com
(3) The ratio-dependent values can be retrieved in Tec Data Finder – www.neugart.com
(4) Permitted 1000 times
(5) These values are based on an output shaft speed of n_2=100 rpm
(6) Based on the end of the output shaft
(7) Other (sometimes higher) values following changes to T_{2N}, F_r, F_a, cycle, and service life of bearing. Application specific configuration with NCP – www.neugart.com

NGV（减速机） NGV gearbox incl. wheel

NGV064
NGV090 NGV110

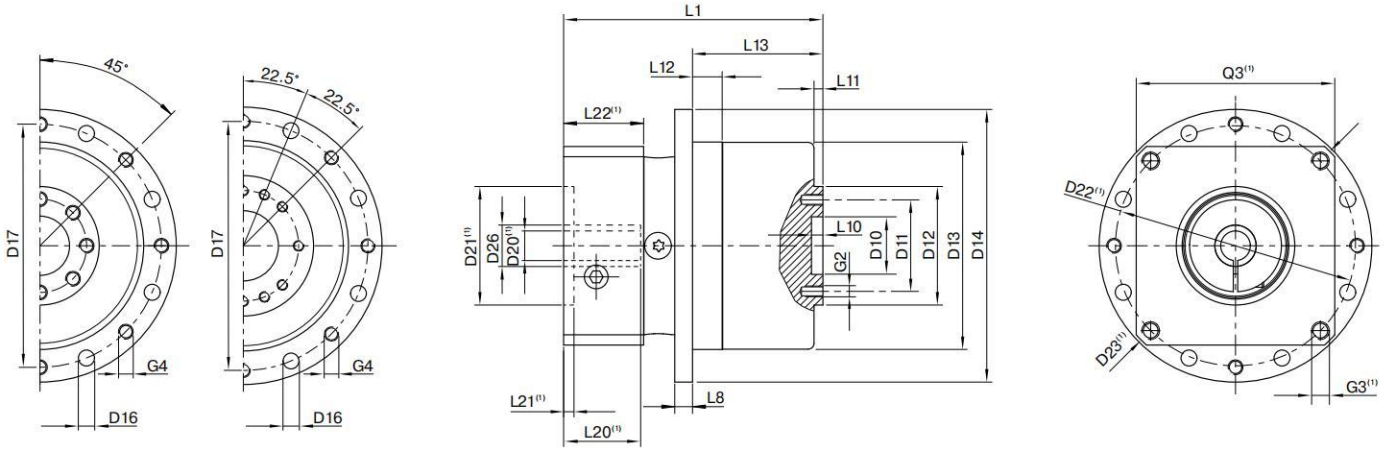

图示为带平键的 NGV090 / 2 级 / 法兰输出轴 / 19 mm 锁紧系统 / 适配电机法兰 - 单一法兰 / B5 电机法兰类型
Drawing corresponds to a NGV090 / 2-stage / flange output shaft / 19 mm clamping system / motor adaptation – one part / B5 flange type motor

(1) 具体尺寸视电机/减速机法兰而定。可以在 www.neugart.com 下 Tec Data Finder，中针对每个电机适配电机特有的输入法兰几何尺寸。
(1) The dimensions vary with the motor/gearbox flange. The input flange dimensions can be retrieved for each specific motor in Tec Data Finder at www.neugart.com

几何尺寸(2)	Geometry(2)			NGV064	NGV090	NGV110
输出端定位凹槽直径	Centering diameter output shaft	D10	H7	20	31,5	40
输出端安装孔节圆直径	Pitch circle diameter output shaft	D11		31.5	50	63
法兰输出轴的直径	Flange output shaft diameter	D12	h7	40	63	80
输出法兰定位凸台直径	Centering diameter output flange	D13	h9	70	94	120
输出法兰直径	Flange diameter output	D14	h9	92	120	158
输出端安装孔直径	Mounting bore output	D16		Ø 5,4 8x45°	Ø 6.6 8x45°	Ø 9 8x45°
输出法兰安装孔节圆直径	Pitch circle diameter output flange	D17		82	108	142
最小总长	Min. total length	L1		84.5	118	144
输出端法兰厚度	Flange thickness output	L8		6	8	10
输出轴定位凸台深度	Centering depth output shaft	L10		4	6	6
		L11		3	6	6,5
输出法兰定位凸台深度	Centering depth output flange	L12		10	15	21
输出法兰长度	Output flange length	L13		44	59,5	80
输入端锁紧系统直径	Clamping system diameter input	D26		11	19	24
				14	24	35
				19	-	-
电机轴直径 j6/k6	Motor shaft diameter j6/k6	D20		5 -19	8 - 24	11 - 35
最大允许的电机轴长	Permissible motor shaft length	L20		更多信息见第 155/156 页 More information on page 155/156		
输入端定位凹槽直径	Centering diameter input	D21				
法兰输出轴 (相似的 EN ISO 9409-1)	Flange output shaft (similar EN ISO 9409-1)					
数量 x 螺纹 x 深度	Number x thread x depth	G2		8 x M5x7	8 x M6x10	12 x M6x12
数量 x 螺纹	Number x thread	G4		8 x M5	8 x M6	8 x M8

(2) 所有的尺寸单位为mm

(2) Dimensions in mm

NGV 配轮 NGV wheel

NGV 车轮 160 NGV wheel 160
NGV 车轮 200 NGV wheel 200

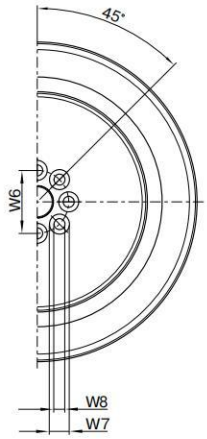

NGV 车轮 250 NGV wheel 250

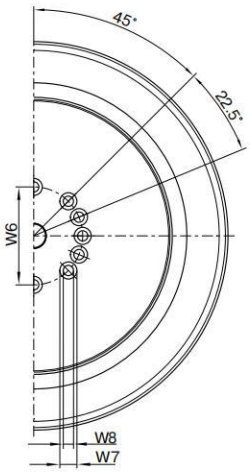

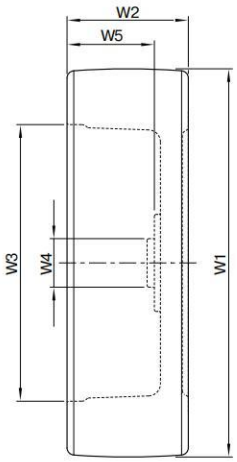

NGV 配轮的几何形状(1)	Geometry NGV wheel(1)			NGV 车轮 160 NGV wheel 160	NGV 车轮 200 NGV wheel 200	NGV 车轮 250 NGV wheel 250
配轮的外径	Outer diameter of wheel	W1		160 ± 1,2	200 ± 1,2	250 ± 1,2
配轮的宽度	Width of wheel	W2		50 ± 0,5	60 ± 0,5	80 ± 0,5
轮缘的内径	Inner diameter of rim	W3		114	155	183
定位凸台的外径	Centering outside diameter	W4	h7	20	31,5	40
轮缘深度	Rim depth	W5		36 ± 0,2	47,5 ± 0,2	66 ± 0,2
螺纹连接配件的节距圆直径	Screw connection pitch circle diameter	W6		31,5	50	63
螺纹连接配件（顶端）的直径	Screw connection head diameter	W7	H13	8 x Ø 10	8 x Ø 11	12 x Ø 11
螺纹连接配件的直径	Screw connection diameter	W8	H13	8 x Ø 5,5	8 x Ø 6,6	12 x Ø 6,6

供货范围：NGV车轮含螺丝和密封盖

Scope of delivery: NGV wheel incl. screws and closure cap

NGV 配轮的特征值	Characteristics NGV wheel			NGV 车轮 160 NGV wheel 160	NGV 车轮 200 NGV wheel 200	NGV 车轮 250 NGV wheel 250
重量	Weight		kg	ca. 2,3	ca. 3,7	ca. 7,6
转动惯量	Mass inertia	J_R	$kgcm^2$	74	203	644
滚动阻力(2)	Roll resistance(2)		N	65	95	165
摩擦系数（静摩擦）(3)	Friction coefficient (static friction)(3)	μ		> 0.25		
地面保护（对应着配轮的接触压力）	Floor protection (corresponds to surface pressure of wheel)		N/mm^2	8,0		
温度范围	Temperature range			-30°C 至 +70°C , 短时间内可达 +90°C 。 如果环境温度超过了 +40°C 承载能力将会下降。 For short periods. The load-bearing capacity is reduced at ambient temperatures higher than +40°C.		
胎面	Tread			Blickle Besthane®		
胎面颜色	Tread color			褐 / Brown		
铺砌面硬度	Tread hardness			92° Shore A		
轮体	Wheel unit			灰色铸件 / Gray cast iron		
轮体颜色	Wheel unit color			银 / Silver		
防腐蚀剂	Corrosion protection			轮体, 漆面 / Wheel unit, painted		
胎面属性（根据胎面制造商的介绍）	Tread characteristics (according to tread manufacturer)			低噪音运行，极低的滚动阻力，动态承载能力较高，地面保护，抗磨损， 耐切割 ，耐撕扯，不落痕迹，不着色。 Low-noise operation, extremely low rolling resistance, high dynamic loading capability, floor protecting, extremely abrasion resistant, high degree of cutting and tear resistance, traceless, contact coloration-free.		

(1) 所有的尺寸单位为 mm
(2) 实验数值。速度为 4 km/h 且达到最大负载时。
(3) 摩擦系数视地面而定。当 NGV 配轮在干燥的、磨光的钢轨道上运行时，摩擦系数 μ=0.25 。

(1) Dimensions in mm
(2) Empirical values. At 4 km/h and with maximum load.
(3) Friction coefficient depending on subsurface. Specification μ=0.25 with NGV wheel on ground, dry steel rail.