PSFN

负载量最高的精密减速机
运行时十分安静
采用法兰输出轴

由于采用了标准化的法兰界面，**PSFN** 的安装非常便捷安全。我们研发的高精度斜齿轮让其他降噪措施毫无用武之地。由于其抗倾斜力矩很高，这款高精度行星减速机可以完成许多高难度任务。

The precision planetary gearbox for maximum loads with particularly quiet drive and flange output shaft

Thanks to its standardized flange interface, our **PSFN** can be installed easily and reliably. Our Neugart-designed helical teeth makes additional noise absorption measures absolute. Thanks to its high tilting moment, you may demand the utmost from this precision planetary gearbox.

额定扭矩 Nominal output torque	**28 - 950 Nm**
径向力 Radial force	**2150 - 23000 N**
轴向力 Axial force	**4300 - 16000 N**
回程间隙 Torsional backlash	**1 - 5 arcmin**
防护等级 Protection class	**IP65**

结构尺寸
Frame sizes

64 **90** **110** **140** **200**

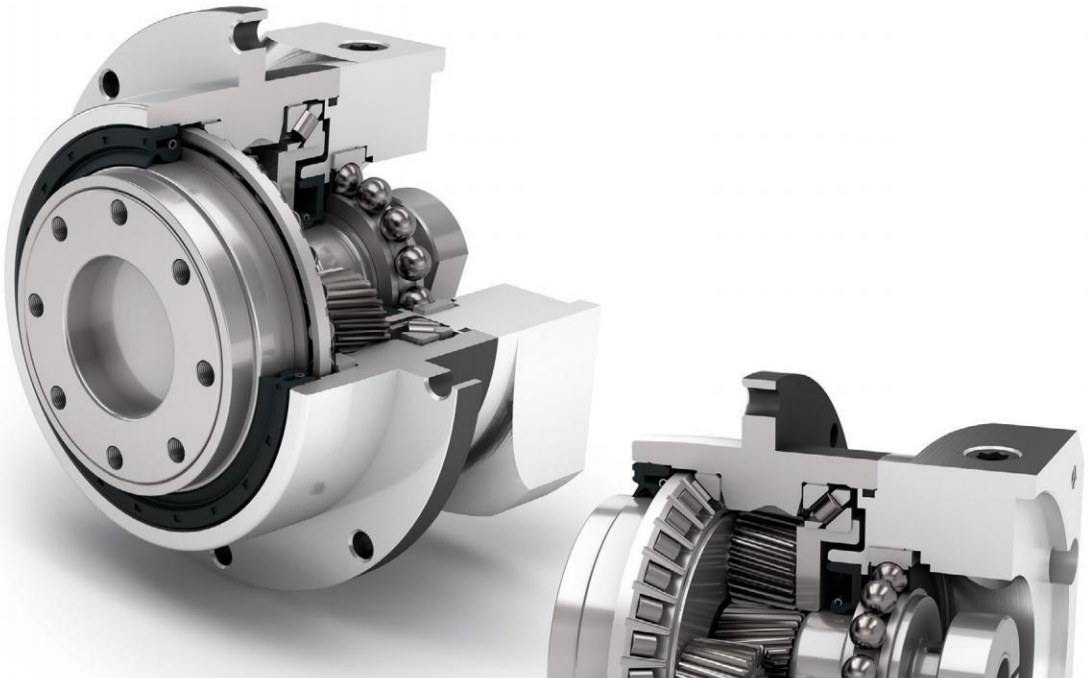

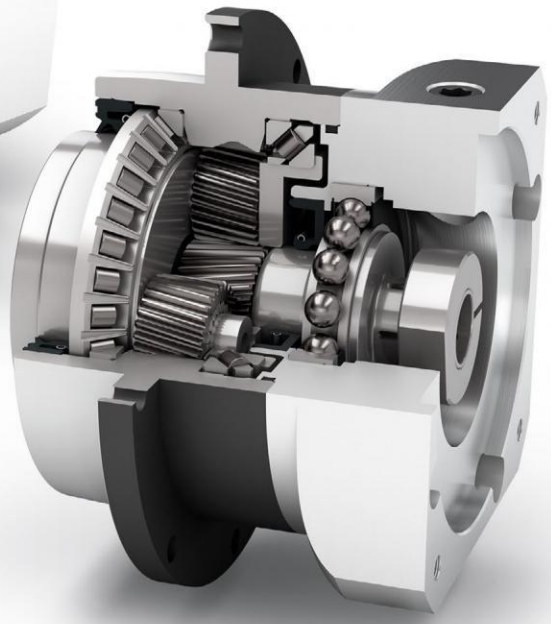

精密型
Precision Line

同轴减速机
Coaxial gearbox

旋转方向 同方向
Equidirectional rotation

斜齿
Helical gear

圆形特大号输出法兰
Extra large round type output flange

配有预紧的角接触滚子轴承
Preloaded angular contact roller bearings

径向轴密封
Rotary shaft seal

法兰输出轴（按 ISO 9409 标准）
Flange output shaft (ISO 9409)

行星齿轮架（笼状结构）
Planet carrier in cage design

可选：降低回程间隙
Option: Reduced backlash

可选：装有小齿轮的高精度减速机 140页
Option: Planetary gearbox with mounted pinion on page 140

技术特点的详细解释，请从第169页读起。
Detailed explanations of the technical features starting on page 169.

Code	减速机参数	Gearbox characteristics			PSFN064	PSFN090	PSFN110	PSFN140	PSFN200	p(1)
	使用寿命 (L_{10h})	Service life (L_{10h})	t_L	h	20000					
	T_{2N} x 0,88 时的使用寿命	Service life at T_{2N} x 0,88			30000					
	满载时效率(2)	Efficiency at full load(2)	η	%	97					1
					96					2
	最低工作温度	Min. operating temperature	T_{min}	°C	-25					
	最高工作温度	Max. operating temperature	T_{max}		90					
	防护等级	Protection class			IP65					
S	标准润滑	Standard lubrication			润滑油(终生润滑) / Oil (lifetime lubrication)					
F	食品级润滑	Food grade lubrication			润滑油(终生润滑) / Oil (lifetime lubrication)					
L	低温润滑(3)	Low temperature lubrication(3)			润滑油(终生润滑) / Oil (lifetime lubrication)					
	安装位置	Installation position			任意 / Any					
S	标准回程间隙	Standard backlash	j_t	arcmin	< 3					1
					< 5					2
R	降低回程间隙	Reduced backlash			< 2	< 1	< 1	< 1	< 1	
	抗扭刚度(2)	Torsional stiffness(2)	c_g	Nm / arcmin	8,2 - 11,8	21,0 - 27,5	55,0 - 62,0	129,0 - 218,0	374,0 - 602,0	1
					8,2 - 13,3	21,0 - 31,0	64,0 - 81,0	127,0 - 201,0	365,0 - 668,0	2
	减速机重量(2)	Gearbox weight(2)	m_G	kg	1,4	3,0	5,0 - 5,2	11,7 - 12,0	28,5 - 29,5	1
					2,0 - 2,1	3,6 - 3,7	6,3 - 6,5	13,4 - 13,8	33,6 - 34,8	2
S	标准的箱体表面	Standard surface			箱体:钢 – 热处理后氧化(黑色) Housing: Steel – heat-treated and post-oxidized (black)					
	运行噪音(4)	Running noise(4)	Q_g	dB(A)	57	58	63	66	68	
	基于减速机输入法兰的最大弯矩(5)	Max. bending moment based on the gearbox input flange(5)	M_b	Nm	18	38	80	180	300	1
					18	18	38	80	180	2

输出轴载荷	Output shaft loads			PSFN064	PSFN090	PSFN110	PSFN140	PSFN200	p(1)
20,000 h 的径向力(6)(7)	Radial force for 20,000 h(6)(7)	$F_{r\,20.000\,h}$	N	2150	3950	4900	12000	23000	
20,000 h 的轴向力(6)(7)	Axial force for 20,000 h(6)(7)	$F_{a\,20.000\,h}$		4300	8200	9500	8500	16000	
30,000 h 的径向力(6)(7)	Radial force for 30,000 h(6)(7)	$F_{r\,30.000\,h}$		1900	3500	4350	11000	21000	
30,000 h 的轴向力(6)(7)	Axial force for 30,000 h(6)(7)	$F_{a\,30.000\,h}$		3800	7200	8400	7500	14000	
最大径向力(7)(8)	Maximum radial force(7)(8)	$F_{r\,Stat}$		2150	3950	4900	12000	23000	
最大轴向力(7)(8)	Maximum axial force(7)(8)	$F_{a\,Stat}$		4300	8200	9500	8500	16000	
20,000 h 倾斜力矩(6)(8)	Tilting moment for 20,000 h(6)(8)	$M_{K\,20.000\,h}$	Nm	132	326	475	1030	2445	
30,000 h 倾斜力矩(6)(8)	Tilting moment for 30,000 h(6)(8)	$M_{K\,30.000\,h}$		117	289	422	944	2232	

转动惯量	Moment of inertia			PSFN064	PSFN090	PSFN110	PSFN140	PSFN200	p(1)
转动惯量(2)	Mass moment of inertia(2)	J	$kgcm^2$	0,128 - 0,188	0,342 - 0,611	0,892 - 1,741	6,526 - 9,670	22,520 - 40,642	1
				0,124 - 0,180	0,125 - 0,197	0,325 - 0,587	0,853 - 1,836	6,434 - 10,410	2

(1) 减速机级数
(2) 传动比相关的数值可在 Tec Data Finder 中检索 – www.neugart.com
(3) T_{min} = -40°C. 理想运行温度最高为 50°C
(4) 距离减速机1 m 时; 在输入转速为 n_1=3000 min^{-1} 且无负荷时测得; i=5
(5) 最大电机重量* (单位 : kg) = 0.2 x M_b / 电机长度 (单位: m)
* 电机重量对称分布
* 水平和固定的安装位置
(6) 数据以 n_2=100 min^{-1} 的输出轴转速为准。
(7) 以输出轴中心为准
(8) 更改 T_{2N}, F_r, F_a 以及周期和轴承使用寿命时; 数值存在偏差(部分较高)。利用 NCP 针对应用进行专门设计 – www.neugart.com

(1) Number of stages
(2) The ratio-dependent values can be retrieved in Tec Data Finder – www.neugart.com
(3) T_{min} = -40°C. Optimal operating temperature max. 50°C
(4) Sound pressure level from 1 m, measured on input running at n_1=3000 rpm no load; i=5
(5) Max. motor weight* in kg = 0.2 x M_b / motor length in m
* with symmetrically distributed motor weight
* with horizontal and stationary mounting
(6) These values are based on an output shaft speed of n_2=100 rpm
(7) Based on the end of the output shaft
(8) Other (sometimes higher) values following changes to T_{2N}, F_r, F_a, cycle, and service life of bearing. Application specific configuration with NCP – www.neugart.com

输出扭矩	Output torques			PSFN064	PSFN090	PSFN110	PSFN140	PSFN200	i(1)	p(2)
额定输出扭矩(3)	Nominal output torque(3)	T_{2N}	Nm	39	80	180	470	950	4	1
				40	80	175	405	950	5	
				37	78	175	355	900	7	
				28	59	140	305	750	10	
				39	80	180	450	950	16	2
				39	80	180	450	950	20	
				40	80	175	405	950	25	
				40	80	175	405	950	35	
				39	80	180	470	950	40	
				40	80	175	405	950	50	
				37	78	175	355	900	70	
				28	59	140	305	750	100	
最大输出扭矩(4)	Max. output torque(4)	T_{2max}	Nm	62	128	288	752	1520	4	1
				64	128	280	648	1520	5	
				59	125	280	568	1440	7	
				45	94	224	488	1200	10	
				62	128	288	720	1520	16	2
				62	128	288	720	1520	20	
				64	128	280	648	1520	25	
				64	128	280	648	1520	35	
				62	128	288	752	1520	40	
				64	128	280	648	1520	50	
				59	125	280	568	1440	70	
				45	94	224	488	1200	100	

(1) 传动比 ($i=n_1/n_2$)
(2) 减速机级数
(3) 利用 NCP 针对应用进行专门设计 – www.neugart.com
(4) 允许输出轴转动30.000转; 参见第 158 页

(1) Ratios ($i=n_1/n_2$)
(2) Number of stages
(3) Application specific configuration with NCP – www.neugart.com
(4) 30,000 rotations of the output shaft permitted; see page 159

输出扭矩	Output torques			PSFN064	PSFN090	PSFN110	PSFN140	PSFN200	i[1]	p[2]
急停扭矩[3]	Emergency stop torque[3]	T_{2Stop}	Nm	120	280	650	1650	3200	4	1
				130	280	650	1650	3200	5	
				80	175	340	1300	3200	7	
				90	200	480	600	1700	10	
				150	300	650	1650	3200	16	2
				150	300	650	1650	3200	20	
				150	300	650	1650	3200	25	
				150	300	650	1650	3200	35	
				150	300	650	1650	3200	40	
				150	300	650	1650	3200	50	
				80	175	340	1300	3200	70	
				90	200	480	600	1700	100	

输入转速	Input speeds			PSFN064	PSFN090	PSFN110	PSFN140	PSFN200	i[1]	p[2]
T_{2N} 和 S1 时的平均热输入转速[4][5]	Average thermal input speed at T_{2N} and S1[4][5]	n_{1N}	min^{-1}	3200[6]	2400[6]	1800[6]	1100[6]	750[6]	4	1
				3800[6]	2950[6]	2250[6]	1350[6]	950[6]	5	
				4500	3800[6]	2950[6]	1800[6]	1250[6]	7	
				4500	4000	3500	2300[6]	1700[6]	10	
				4500	4500	3800[6]	2450[6]	1550[6]	16	2
				4500	4500	4000	3050[6]	1900[6]	20	
				4500	4500	4000	3350[6]	2050[6]	25	
				4500	4500	4000	3500	2650[6]	35	
				4500	4500	4000	3500	3000[6]	40	
				4500	4500	4000	3500	3000	50	
				4500	4500	4000	3500	3000	70	
				4500	4500	4000	3500	3000	100	
最高机械输入转速[4]	Max. mechanical input speed[4]	n_{1Limit}	min^{-1}	14000	10000	8500	6500	6000		1
				14000	14000	10000	8500	6500		2

(1) 传动比 ($i=n_1/n_2$)
(2) 减速机级数
(3) 允许 1000 次
(4) 利用 NCP 针对应用设计转速 – www.neugart.com
(5) 定义请参见第 158 页
(6) 在 50% T_{2N} 输出和 S1 模式下 的平均热传动转速

(1) Ratios ($i=n_1/n_2$)
(2) Number of stages
(3) Permitted 1000 times
(4) Application-specific speed configurations with NCP – www.neugart.com
(5) See page 159 for the definition
(6) Average thermal input speed at 50% T_{2N} and S1

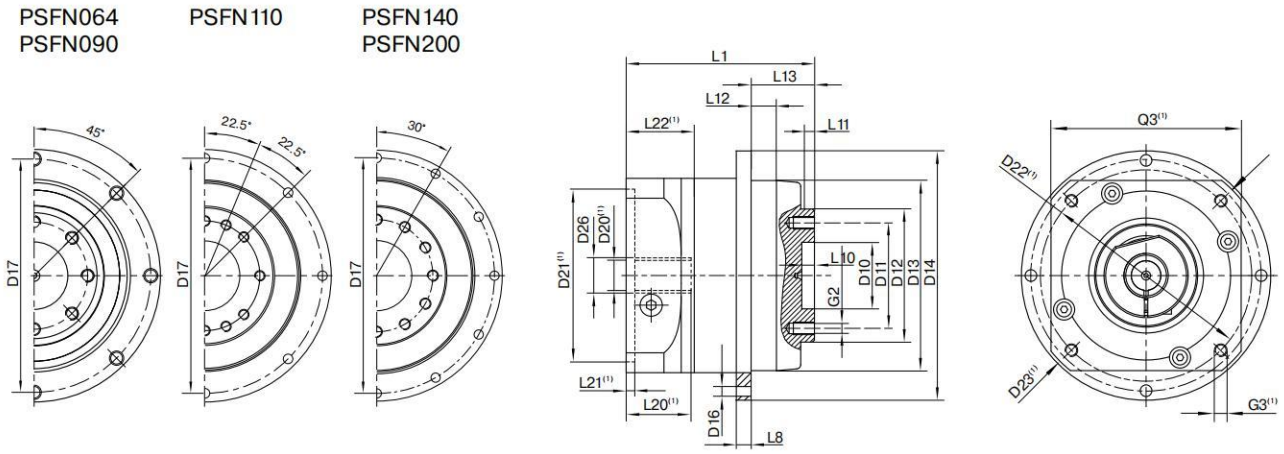

图示为带平键的 PSFN090 / 1 级 / 法兰输出轴 / 14 mm 锁紧系统 / 适配电机法兰 – 2 件式 – 圆形通用法兰 / B5 电机法兰类型
Drawing corresponds to a PSFN090 / 1-stage / flange output shaft / 14 mm clamping system / motor adaptation – 2-part – round universal flange / B5 flange type motor

(1) 具体尺寸视电机/减速机法兰而定。可以在 www.neugart.com 下 Tec Data Finder。中针对每个电机适配电机特有的输入法兰几何尺寸。
(1) The dimensions vary with the motor/gearbox flange. The input flange dimensions can be retrieved for each specific motor in Tec Data Finder at www.neugart.com

几何尺寸(2)	**Geometry(2)**			**PSFN064**	**PSFN090**	**PSFN110**	**PSFN140**	**PSFN200**	**p(3)**	**Code**
输出端定位凹槽直径	Centering diameter output shaft	D10	H7	20	31,5	40	50	80		
输出端安装孔节圆直径	Pitch circle diameter output shaft	D11		31,5	50	63	80	125		
法兰输出轴的直径	Flange output shaft diameter	D12	h7	40	63	80	100	160		
输出法兰定位凸台直径	Centering diameter output flange	D13		64	90	110	140	200		
输出法兰直径	Flange diameter output	D14		86	118	145	179	247		
输出端安装孔直径	Mounting bore output	D16		4,5 8x45°	5,5 8x45°	5,5 8x45°	6,6 12x30°	9 12x30°		
输出法兰安装孔节圆直径	Pitch circle diameter output flange	D17		79	109	135	168	233		
最小总长	Min. total length	L1		71	89,5	108	142	172	1	
				99,5	111,5	130	173	217	2	
输出端法兰厚度	Flange thickness output	L8		4	7	8	10	12		
输出轴定位凸台深度	Centering depth output shaft	L10		4,5	6,5	6,5	6,5	10		
		L11		3	6	6	6	7		
输出法兰定位凸台深度	Centering depth output flange	L12		10	12	12	14	17,5		
输出法兰长度	Output flange length	L13		19,5	30,0	29,0	38,0	50,0		
电机轴直径 j6/k6	Motor shaft diameter j6/k6	D20		更多信息见第 155/156 页 More information on page 155/156						
输入端锁紧系统直径	Clamping system diameter input	D26								
法兰输出轴 (相似的 EN ISO 9409-1)	Flange output shaft (similar EN ISO 9409-1)									**D**
数量 x 螺纹 x 深度	Number x thread x depth	G2		8 x M5x7	8 x M6x10	12 x M6x12	12 x M8x15	12 x M10x20		
带有配合销孔的法兰输出轴 (EN ISO 9409-1)	Flange output shaft with dowel hole (EN ISO 9409-1)									**E**
配合销孔 x 深度	Dowel hole x depth	D15	H7	5x5	6x6	6x6	8x8	10x10		
数量 x 螺纹 x 深度	Number x thread x depth	G2		7 x M5x7	7 x M6x10	11 x M6x12	11 x M8x15	11 x M10x20		

(2) 所有的尺寸单位为mm
(3) 减速机级数

(2) Dimensions in mm
(3) Number of stages