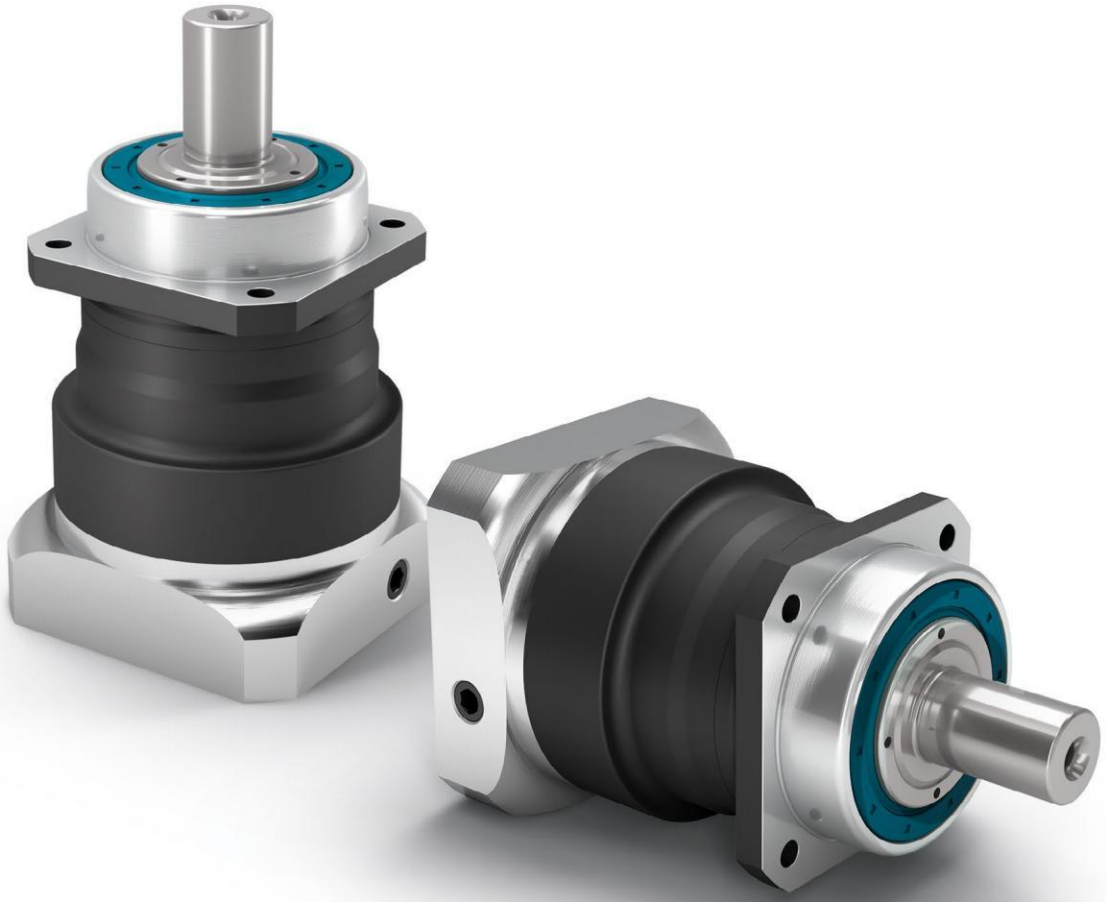

PSN

斜齿高精度减速机能够实现噪音极低的同步运行，轴承负载能力强

PSN的进步之处在于：其新型斜齿轮能够实现噪音极低的同步运行。使用这款高精度行星减速机时，振动将降至最低——可以在轴承负载极高时提高工件表面的质量。

The helical precision planetary gearbox for low-noise operation and high bearing loads

Our **PSN** embodies pure progress: Its innovative helical teeth safeguard low-noise operations. This precision planetary gearbox minimizes vibrations, and therefore increases the quality of your workpiece surfaces even under the highest bearing loads.

额定扭矩 Nominal output torque	**28 - 950 Nm**
径向力 Radial force	**3200 - 20000 N**
轴向力 Axial force	**4400 - 19000 N**
回程间隙 Torsional backlash	**1 - 5 arcmin**
防护等级 Protection class	**IP65**

结构尺寸
Frame sizes

70	**90**	**115**	**142**	**190**

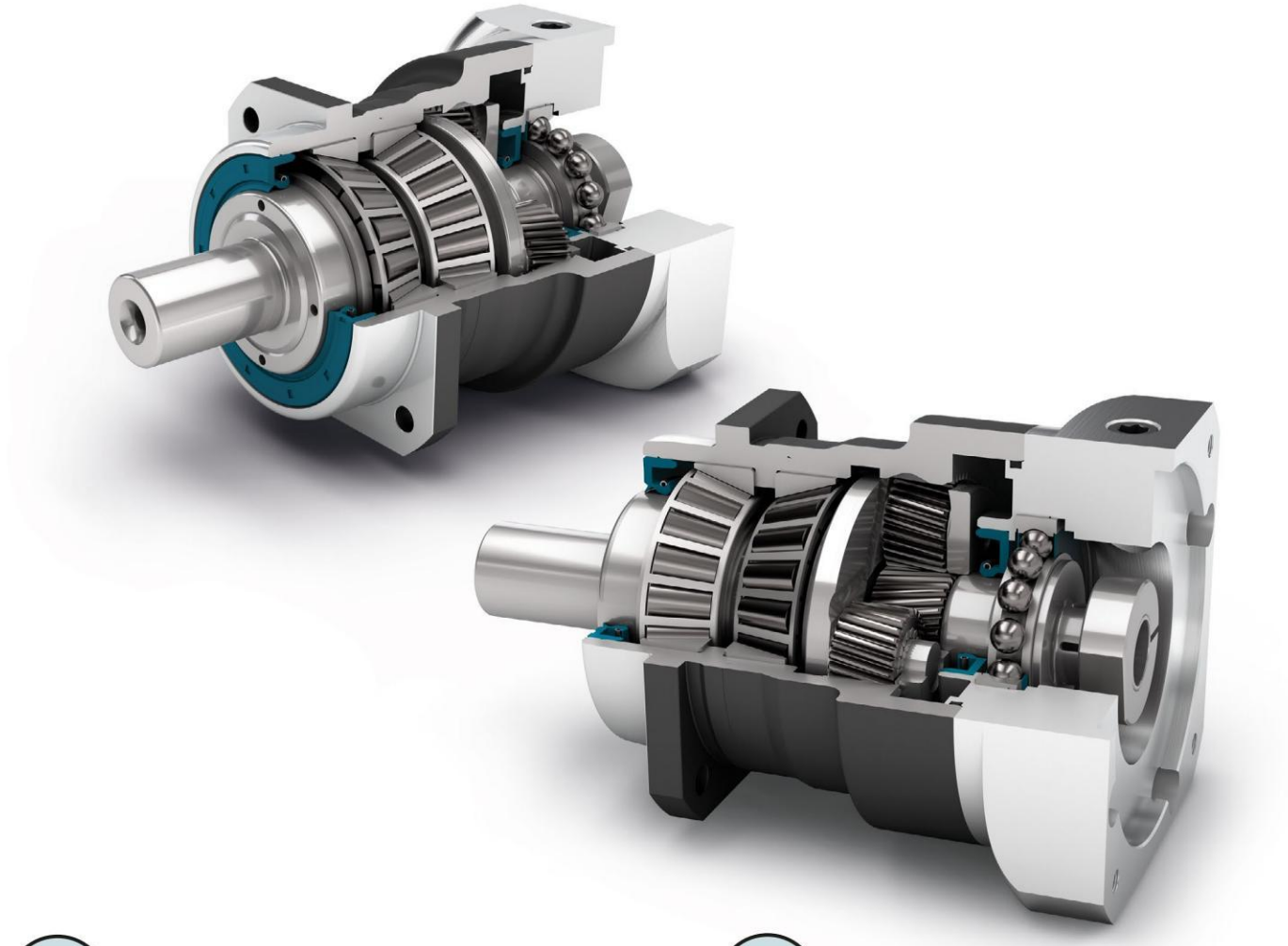

精密型
Precision Line

旋转方向 同方向
Equidirectional rotation

正方形输出法兰
Square type output flange

径向轴密封
Rotary shaft seal

行星齿轮架（笼状结构）
Planet carrier in cage design

可选：花键输出轴（DIN 5480）
Option: Splined output shaft (DIN 5480)

同轴减速机
Coaxial gearbox

斜齿
Helical gear

配有预紧的圆锥滚子轴承
Preloaded tapered roller bearings

输出端带有超长定心环
Extra long centering collar

可选：降低回程间隙
Option: Reduced backlash

可选：装有小齿轮的高精度减速机 140页
Option: Planetary gearbox with mounted pinion on page 140

技术特点的详细解释，请从第169页读起。
Detailed explanations of the technical features starting on page 169.

Code	减速机参数	Gearbox characteristics			PSN070	PSN090	PSN115	PSN142	PSN190	p(1)
	使用寿命 (L_{10h})	Service life (L_{10h})	t_L	h	20.000					
	T_{2N} x 0,88 时的使用寿命	Service life at T_{2N} x 0,88			30.000					
	满载时效率(2)	Efficiency at full load(2)	η	%	98					1
					97					2
	最低工作温度	Min. operating temperature	T_{min}	°C	-25					
	最高工作温度	Max. operating temperature	T_{max}		90					
	防护等级	Protection class			IP65					
S	标准润滑	Standard lubrication			润滑油(终生润滑) / Oil (lifetime lubrication)					
F	食品级润滑	Food grade lubrication			润滑油(终生润滑) / Oil (lifetime lubrication)					
L	低温润滑(3)	Low temperature lubrication(3)			润滑油(终生润滑) / Oil (lifetime lubrication)					
	安装位置	Installation position			任意 / Any					
S	标准回程间隙	Standard backlash	j_t	arcmin	< 3					1
					< 5					2
R	降低回程间隙	Reduced backlash			< 2	< 1	< 1	< 1	< 1	
	抗扭刚度(2)	Torsional stiffness(2)	c_g	Nm / arcmin	3,6 - 4,8	9,2 - 13,0	22,0 - 34,5	62,0 - 88,0	181,0 - 246,0	1
					3,6 - 5,0	10,2 - 13,8	28,0 - 39,5	61,0 - 85,0	179,0 - 255,0	2
	减速机重量(2)	Gearbox weight(2)	m_G	kg	1,9 - 2,0	3,4 - 3,5	6,8 - 7,1	15,3 - 15,8	34,9 - 36,7	1
					2,6 - 2,7	4,0 - 4,1	8,0 - 8,2	17,1 - 17,6	39,8 - 41,7	2
S	标准的箱体表面	Standard surface			箱体:钢 – 热处理后氧化（黑色） Housing: Steel – heat-treated and post-oxidized (black)					
	运行噪音(4)	Running noise(4)	Q_g	dB(A)	57	58	63	66	68	
	基于减速机输入法兰的最大弯矩(5)	Max. bending moment based on the gearbox input flange(5)	M_b	Nm	18	38	80	180	300	1
					18	18	38	80	180	2

输出轴载荷	Output shaft loads			PSN070	PSN090	PSN115	PSN142	PSN190	p(1)
20,000 h 的径向力(6)(7)	Radial force for 20,000 h(6)(7)	$F_{r\,20.000\,h}$	N	3200	5500	6000	13000	20000	
20,000 h 的轴向力(6)(7)	Axial force for 20,000 h(6)(7)	$F_{a\,20.000\,h}$		4400	6400	8000	15000	19000	
30,000 h 的径向力(6)(7)	Radial force for 30,000 h(6)(7)	$F_{r\,30.000\,h}$		3200	4800	5400	11500	17500	
30,000 h 的轴向力(6)(7)	Axial force for 30,000 h(6)(7)	$F_{a\,30.000\,h}$		3900	5700	7000	13500	18500	
最大径向力(7)(8)	Maximum radial force(7)(8)	$F_{r\,Stat}$		3200	5500	6000	13000	20000	
最大轴向力(7)(8)	Maximum axial force(7)(8)	$F_{a\,Stat}$		4400	6400	8000	15000	19000	
20,000 h 倾斜力矩(6)(8)	Tilting moment for 20,000 h(6)(8)	$M_{K\,20.000\,h}$	Nm	203	419	562	1566	2887	
30,000 h 倾斜力矩(6)(8)	Tilting moment for 30,000 h(6)(8)	$M_{K\,30.000\,h}$		203	366	506	1385	2526	

转动惯量	Moment of inertia			PSN070	PSN090	PSN115	PSN142	PSN190	p(1)
转动惯量(2)	Mass moment of inertia(2)	J	$kgcm^2$	0,128 - 0,272	0,330 - 0,811	0,857 - 2,484	6,475 - 13,112	21,695 - 53,182	1
				0,123 - 0,177	0,124 - 0,204	0,321 - 0,600	0,840 - 1,962	6,360 - 10,654	2

(1) 减速机级数
(2) 传动比相关的数值可在 Tec Data Finder 中检索 – www.neugart.com
(3) T_{min} = -40°C. 理想运行温度最高为 50°C
(4) 距离减速机 1 m 时; 在输入转速为 n_1=3000 min^{-1} 且无负荷时测得; i=5
(5) 最大电机重量* (单位 : kg) = 0.2 x M_b / 电机长度 (单位: m)
* 电机重量对称分布
* 水平和固定的安装位置
(6) 数据以 n_2=100 min^{-1} 的输出轴转速为准。
(7) 以输出轴中心为准
(8) 更改 T_{2N}, F_r, F_a 以及周期和轴承使用寿命时, 数值存在偏差(部分较高)。利用 NCP 针对应用进行专门设计 – www.neugart.com

(1) Number of stages
(2) The ratio-dependent values can be retrieved in Tec Data Finder – www.neugart.com
(3) T_{min} = -40°C. Optimal operating temperature max. 50°C
(4) Sound pressure level from 1 m, measured on input running at n_1=3000 rpm no load; i=5
(5) Max. motor weight* in kg = 0.2 x M_b / motor length in m
* with symmetrically distributed motor weight
* with horizontal and stationary mounting
(6) These values are based on an output shaft speed of n_2=100 rpm
(7) Based on center of output shaft
(8) Other (sometimes higher) values following changes to T_{2N}, F_r, F_a, cycle, and service life of bearing. Application specific configuration with NCP – www.neugart.com

输出扭矩	Output torques			PSN070	PSN090	PSN115	PSN142	PSN190	i(1)	p(2)
额定输出扭矩(3)(4)	Nominal output torque(3)(4)	T_{2N}	Nm	29	54	135	380	845	3	1
				39	80	180	470	950	4	
				40	80	175	405	950	5	
				37	78	175	355	900	7	
				28	59	140	305	750	10	
				29	54	135	380	845	12	2
				29	54	135	380	845	15	
				39	80	180	450	950	16	
				39	80	180	450	950	20	
				40	80	175	405	950	25	
				40	80	175	405	950	35	
				39	80	180	470	950	40	
				40	80	175	405	950	50	
				37	78	175	355	900	70	
				28	59	140	305	750	100	
最大输出扭矩(4)(5)	Max. output torque(4)(5)	T_{2max}	Nm	46	86	216	608	1352	3	1
				62	128	288	752	1520	4	
				64	128	280	648	1520	5	
				59	125	280	568	1440	7	
				45	94	224	488	1200	10	
				46	86	216	608	1352	12	2
				46	86	216	608	1352	15	
				62	128	288	720	1520	16	
				62	128	288	720	1520	20	
				64	128	280	648	1520	25	
				64	128	280	648	1520	35	
				62	128	288	752	1520	40	
				64	128	280	648	1520	50	
				59	125	280	568	1440	70	
				45	94	224	488	1200	100	

PSN

(1) 传动比 ($i=n_1/n_2$)
(2) 减速机级数
(3) 利用 NCP 针对应用进行专门设计 – www.neugart.com
(4) 平键 (代码 "A") 时的数值: 针对交变载荷
(5) 允许输出轴转动30.000转; 参见第 158 页

(1) Ratios ($i=n_1/n_2$)
(2) Number of stages
(3) Application specific configuration with NCP – www.neugart.com
(4) Values for feather key (code "A"): for repeated load
(5) 30,000 rotations of the output shaft permitted; see page 159

输出扭矩	Output torques			PSN070	PSN090	PSN115	PSN142	PSN190	i(1)	p(2)
急停扭矩(3)	Emergency stop torque(3)	T_{2Stop}	Nm	90	210	490	1250	2400	3	1
				120	280	650	1650	3200	4	
				130	280	650	1650	3200	5	
				80	175	340	1300	3200	7	
				90	200	480	600	1700	10	
				135	220	500	1250	2400	12	2
				135	220	500	1250	2400	15	
				150	300	650	1650	3200	16	
				150	300	650	1650	3200	20	
				150	300	650	1650	3200	25	
				150	300	650	1650	3200	35	
				150	300	650	1650	3200	40	
				150	300	650	1650	3200	50	
				80	175	340	1300	3200	70	
				80	200	480	600	1700	100	

输入转速	Input speeds			PSN070	PSN090	PSN115	PSN142	PSN190	i(1)	p(2)
T_{2N} 和 S1时的平均热输入转速(4)(5)	Average thermal input speed at T_{2N} and S1(4)(5)	n_{1N}	min^{-1}	3000(6)	2700(6)	2000(6)	1000(6)	750(6)	3	1
				3700(6)	3050(6)	2250(6)	1250(6)	900(6)	4	
				4400(6)	3700(6)	2750(6)	1550(6)	1100(6)	5	
				4500	4000	3500(6)	2000(6)	1450(6)	7	
				4500	4000	3500	2500(6)	1900(6)	10	
				4500	4500	4000(6)	2400(6)	1550(6)	12	2
				4500	4500	4000	3000(6)	1900(6)	15	
				4500	4500	4000(6)	2600(6)	1650(6)	16	
				4500	4500	4000	3250(6)	2050(6)	20	
				4500	4500	4000	3500(6)	2200(6)	25	
				4500	4500	4000	3500	2800(6)	35	
				4500	4500	4000	3500	3000(6)	40	
				4500	4500	4000	3500	3000	50	
				4500	4500	4000	3500	3000	70	
				4500	4500	4000	3500	3000	100	
最高机械输入转速(4)	Max. mechanical input speed(4)	n_{1Limit}	min^{-1}	14000	10000	8500	6500	6000		1
				14000	14000	10000	8500	6500		2

(1) 传动比 ($i=n_1/n_2$)
(2) 减速机级数
(3) 允许 1000 次
(4) 利用 NCP 针对应用设计转速 – www.neugart.com
(5) 定义请参见第 158 页
(6) 在 50% T_{2N} 输出和 S1 模式下 的平均热传动转速

(1) Ratios ($i=n_1/n_2$)
(2) Number of stages
(3) Permitted 1000 times
(4) Application-specific speed configurations with NCP – www.neugart.com
(5) See page 159 for the definition
(6) Average thermal input speed at 50% T_{2N} and S1

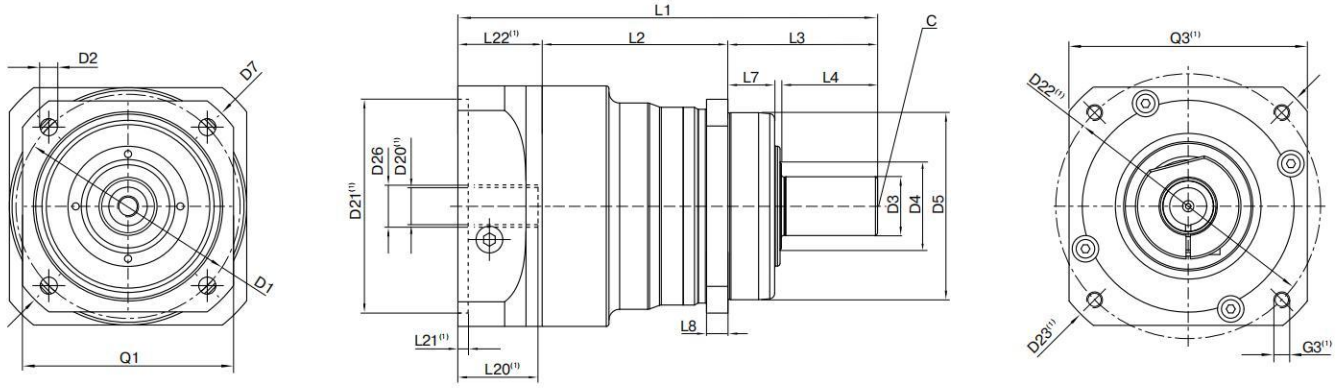

图示为带平键的 PSN090 / 1 级 / 光滑输出轴 / 14 mm 锁紧系统 / 适配电机法兰 – 2 件式 – 圆形通用法兰 / B5 电机法兰类型
Drawing corresponds to a PSN090 / 1-stage / smooth output shaft / 14 mm clamping system / motor adaptation – 2-part – round universal flange / B5 flange type motor

(1) 具体尺寸视电机/减速机法兰而定。可以在 www.neugart.com 下 Tec Data Finder。中针对每个电机适配电机特有的输入法兰几何尺寸。
(1) The dimensions vary with the motor/gearbox flange. The input flange dimensions can be retrieved for each specific motor in Tec Data Finder at www.neugart.com

几何尺寸(2)	Geometry(2)			PSN070	PSN090	PSN115	PSN142	PSN190	p(3)	Code
输出端安装孔节圆直径	Pitch circle diameter output	D1		68 - 75	85	120	165	215		
输出端安装孔直径	Mounting bore output	D2	4x	5,5	6,5	9,0	11,0	13,5		
输出轴直径	Shaft diameter output	D3	k6	16	22	32	40	55		
输出轴轴肩直径	Shaft collar output	D4		21,5	31,5	41,5	57,5	76,5		
输出端定位凸台直径	Centering diameter output	D5	g7	60	70	90	130	160		
输出法兰对角线尺寸	Diagonal dimension output	D7		92	100	140	185	240		
输出端法兰外方	Flange cross section output	Q1	■	70	80	110	142	190		
最小总长	Min. total length	L1		134	157	202,5	261,5	310,5	1	
				162,5	179	224,5	292,5	355,5	2	
箱体长度	Housing length	L2		60,5	69,5	71	101,5	130,5	1	
				89	98	104,5	139	194	2	
输出端定位凸台深度	Centering depth output	L7		19	17,5	28	28	28		
输出端法兰厚度	Flange thickness output	L8		7	8	10	12	15		
中心孔 (DIN 332, DR 形)	Center hole (DIN 332, type DR)	C		M5x12,5	M8x19	M12x28	M16x36	M20x42		
电机轴直径 j6/k6	Motor shaft diameter j6/k6	D20		更多信息见第 155/156 页 More information on page 155/156						
输入端锁紧系统直径	Clamping system diameter input	D26								
带平键的输出轴 (DIN 6885-1)	Output shaft with feather key (DIN 6885-1)			A 5x5x25	A 6x6x28	A 10x8x50	A 12x8x65	A 16x10x70		A
平键宽度 (DIN 6885-1)	Feather key width (DIN 6885-1)	B1		5	6	10	12	16		
含平键在内的轴高 (DIN 6885-1)	Shaft height including feather key (DIN 6885-1)	H1		18	24,5	35	43	59		
输出轴轴长	Shaft length output	L3		48	56	88	110	112		
到轴肩的距离	Shaft length from shoulder	L4		28	36	58	80	82		
平键长度	Feather key length	L5		25	28	50	65	70		
到轴端的距离	Distance from shaft end	L6		2	4	4	8	6		
光滑输出轴	Smooth output shaft									B
输出轴轴长	Shaft length output	L3		48	56	88	110	112		
到轴肩的距离	Shaft length from shoulder	L4		28	36	58	80	82		
花键输出轴 (DIN 5480)	Splined output shaft (DIN 5480)			W16x0,8 x18x6m	W22x1,25 x16x6m	W32x1,25 x24x6m	W40x2,0 x18x6m	W55x2,0 x26x6m		C
花键或键槽的长度	Width of gearing	L_v		15	15	15	20	22		
输出轴轴长	Shaft length output	L3		46	46	56	70	71,5		
到轴肩的距离	Shaft length from shoulder	L4		26	26	26	40	41,5		

(2) 所有的尺寸单位为mm
(3) 减速机级数

(2) Dimensions in mm
(3) Number of stages