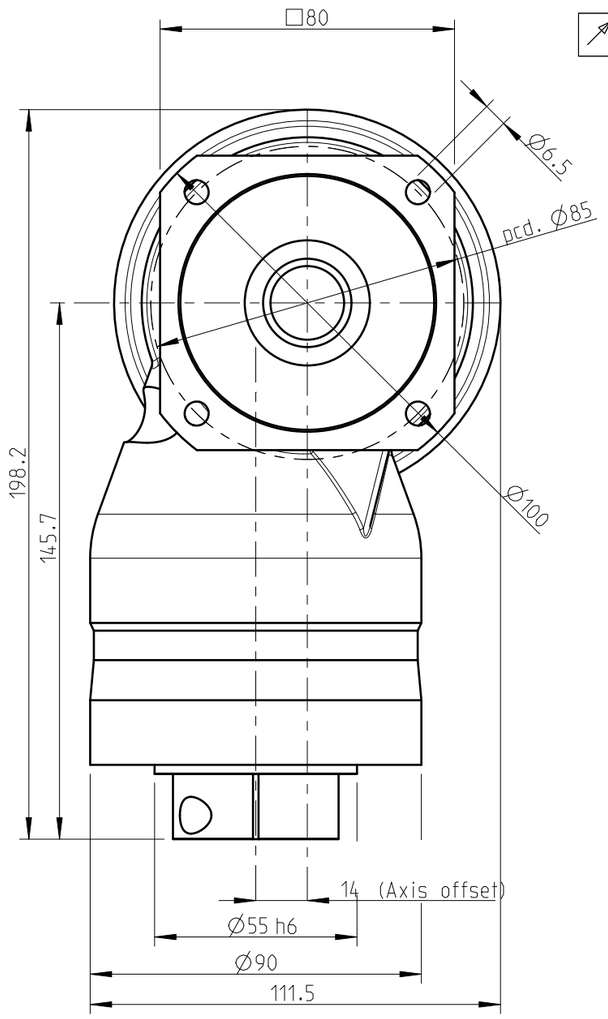

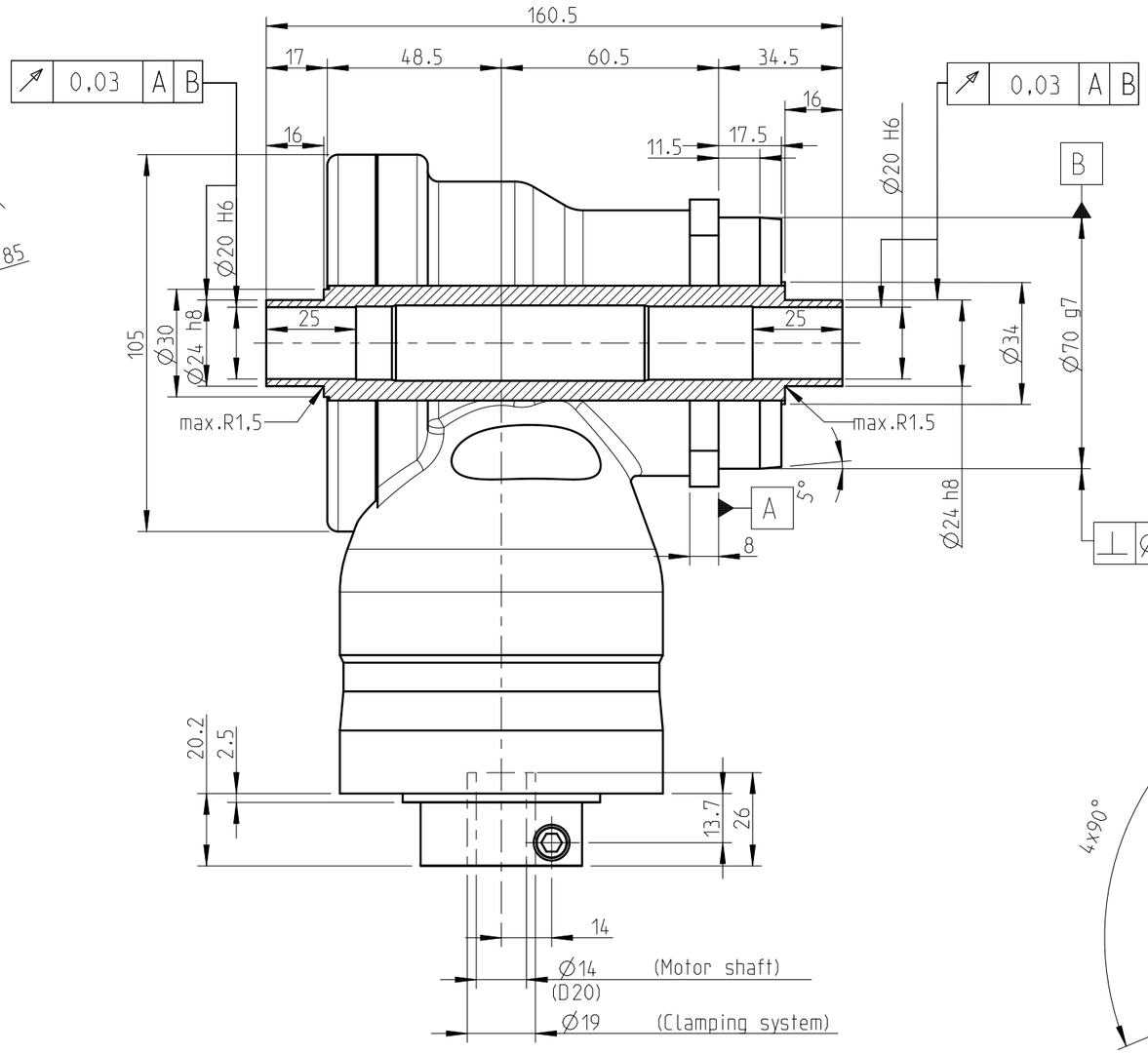

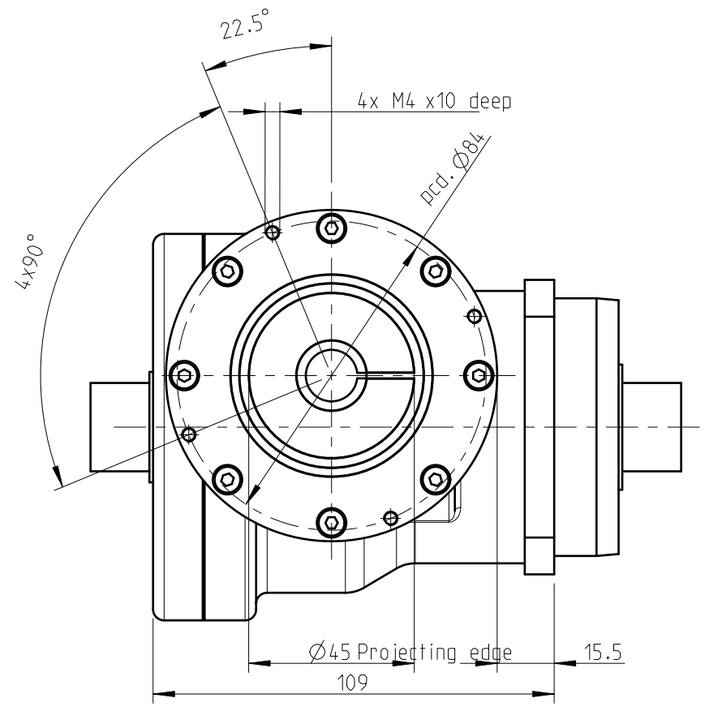

Materials / Surfaces:

Input flange: Aluminum / Untreated
Angle housing: Aluminum / Anodized (black)
Output flange: Steel / Untreated

Variables on the drawing are dependent upon the motor.
The given dimensions are exemplary

Please see mounting instructions!
Please see operating manual!
Subject to modifications!

NEUGART	Scale: 3:5	DIN A3	19
	Revision status: E from: 12.09.2018		
	Changed revision status: D from: 06.02.2018		
General tolerance DIN ISO 2768-cL	W GN090-aii-SSSG3AE-R(D20)		
Neugart GmbH Keltenstr. 16 D-77971 Kippenheim			50

Technical data	Character	Unit	
Bevel gearbox - gearing type	-	-	Hypoid teeth
Rotation direction	-	-	Input and output in opposite directions
Number of stages	z	-	1-stage
Output shaft bearing	-	-	Tapered roller bearing
Seal	-	-	Radial shaft seal
Service life (L10h)	t_L	h	20.000
Max. operating temperature	T_{min} / T_{max}	°C	-25 / +90
Protection class	-	-	IP 65
Lubrication (lifetime lubrication)	-	-	Standard lubrication (oil)
Installation position	-	-	Any
Max. bending moment based on the gearbox input flange (for motor weight) (1)	M_b	Nm	25,5
Motor flange precision	-	-	DIN 42955-R
Required motor shaft tolerance	-	-	j6; k6
Min. permissible motor shaft length	L_{20min}	mm	16
Clamp screw tightening torque	$T_{A,K}$	Nm	9,5
Reference operating mode	-	-	S1
Reference operating factor	K_A	-	1
Reference speed	n_2	rpm	100
Reference ambient temperature	T_{Amb}	°C	20
Radial force for output bearing based on shaft center after L10h=20,000h with Fa=0N	$F_{r\ 20.000h}$	N	4000
Axial force for output bearing based on gearbox axis after L10h=20,000h with Fr=0N	$F_{a\ 20.000h}$	N	5900
Radial force for output bearing based on shaft center after L10h=30,000h with Fa=0N	$F_{r\ 30.000h}$	N	4000
Axial force for output bearing based on gearbox axis after L10h=30,000h with Fr=0N	$F_{a\ 30.000h}$	N	5200
Static radial force based on shaft center and T2=0Nm	$F_{r\ Stat}$	N	4000
Static axial force based on gearbox axis and T2=0Nm	$F_{a\ Stat}$	N	5900

Ratio-dependent data	Character	Unit					
Ratio	aii	-	4	5	7	8	10
Nominal output torque	T_{2N}	Nm	70	70	51	50	40
Max. output torque for 30,000 output shaft rotations (2)	T_{2max}	Nm	112	112	82	80	64
Emergency stop torque permitted 1000 times	T_{2Stop}	Nm	200	200	150	150	150
Idle torque for n1=3,000 rpm and 20 °C gearbox temperature	T_0	Nm	2,35	2,15	2	1,9	1,85
Average thermal input speed at 50% T2N, S1, and T_Amb Operating temperature may not be exceeded!	$n_{1N\ 50\%}$	rpm	1700	1850	2200	2200	2350
Average thermal input speed at 100% T2N, S1, and T_Amb Operating temperature may not be exceeded!	$n_{1N\ 100\%}$	rpm	1400	1550	1950	1950	2150
Max. mechanical input speed Operating temperature may not be exceeded!	$n_{1\ Limit}$	rpm	14000	14000	14000	14000	14000
Torsional backlash based on output shaft	j_t	arcmin	< 5	< 5	< 5	< 5	< 5
Torsional stiffness based on output shaft	c_g	Nm/arcmin	5,7	5,4	5	4,7	4,2
Efficiency at T2N, gearbox temperature 70 °C and n1=1,000rpm	η	%	95	94	91	91	88
Running noise at n1=3,000 rpm without load at a distance of 1m	Q_g	dB(A)	67	67	67	67	67
Gearbox weight	m_G	kg	4,7	4,7	4,7	4,7	4,7
Mass moment of inertia based on clamping system diameter input	J	kgcm²	1,417	1,24	1,096	1,059	0,908

(1) Max. motor weight* in kg = $\frac{0{,}2 * M_b}{\text{motor length in m}}$

* with symmetrically distributed motor weight
* with horizontal and stationary mounting

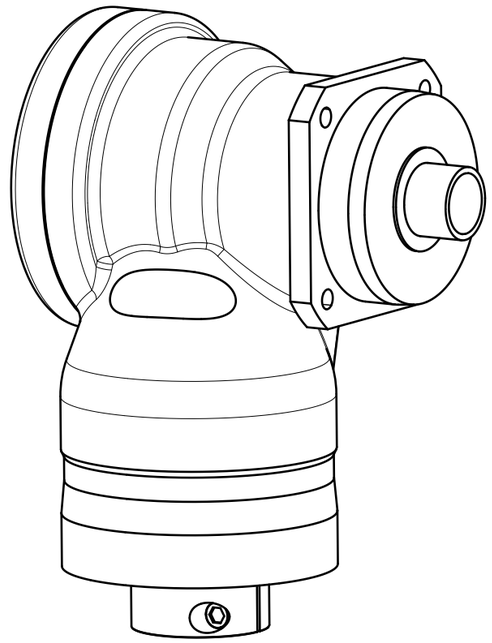

Subject to modifications!

NEUGART

WGN090-aii-SSSG3AE-R(D20)

Sheet 2/2

Revision status: E from: 12.09.2018